Meghalaya Power Transmission Corporation Limited

Bidding Document

For

RENOVATION AND UPGRADATION OF PROTECTION & CONTROL SYSTEM UNDER PSDF – PHASE II AND RELATED SERVICES AT VARIOUS 132kV GRID SUBSTATIONS OF MePTCL ON TURNKEY BASIS

(E Tender)

Volume-II

BID IDENTIFICATION No:
MePTCL/CE(T)/TT-139/PSDF /Pt-VI/2023-24/3

TECHNICAL SPECIFICATION

CONTENTS

SECTION – 1	SCOPE AND GENERAL TECHNICAL CONDITIONS
SECTION - 2	TECHNICAL SPECIFICATIONS OF 132/33 KV SWITCHYARD AND BAY EQUIPMENTS AS PER ANNEXURE-I
SECTION – 3	TECHNICAL SPECIFICATIONS OF 132/33KV CRP & SUB-STATION AUTOMATION AS PER ANNEXURE-VI, AS PER SITE REQUIREMENT.
SECTION – 4.	TECHNICAL SPECIFICATIONS OF SUB-STATION WORK AS PER ANNEXURE- VII AS PER SITE REQUIREMENT, IF APPLICABLE.

SECTION - 1

SCOPE AND GENERAL TECHNICAL CONDITIONS

Table of Contents

1.1.0	INTENT OF THE SPECIFICATION
1.2.0	SCOPE
1.3.0	DETAILS OF TRANSMISSION LINE ROUTES AND TERRAIN
1.4.0	CONTRACTOR TO INFORM HIMSELF FULLY
1.5.0	ACCESS TO THE LINE AND RIGHT OF WAY
1.6.0	BASIC TECHNICAL DATA
1.7.0	DRAWINGS AND DOCUMENTS
1.8.0	QUALITY ASSURANCE AND INSPECTION
1.9.0	TESTS AND STANDARDS
1.10.0	TEST REPORTS
1.11.0	GUARANTEED TECHNICAL PARTICULARS
1.12.0	COMMISSIONING SPARES
1.13.0	CONFORMITY WITH INDIAN ELECTRICITY RULES & OTHER REGULATIONS
1.14.0	CONTRACTOR'S REQUIREMENT
Annexure -1	SCHEDULE 1 (SUPPLY)
Annexure-2	SCHEDULE 2 (WORKS)
Annexure-3	SCHEDULE 3 (FREIGHT & INSURANCE)
Annexure-A	Lumpsum List of Items.

SCOPE AND GENERAL TECHNICAL CONDITIONS

INTENT OF THE SPECIFICATION

This Volume of the specification deals with the information & criteria for Manufacturing, Supply, Retrofit, Erection, Testing and Commissioning of various Grid Substations Products and Related Services at 132 kV Grid Substation of MePTCL on "Turnkey Contract" as defined in Volume 1.

1.2.0 SCOPE: The scope of work include:

(I) Manufacture & Supply of Various Products like 145 kV SF6 CB, CT, PT, CVT, PLCC etc

(II) Retrofit and Erection, Testing, Various Products like 145 kV SF6 CB, CT, PT, CVT, PLCC etc

(III) Civil Works if any.

1.2.1 The work involves design (as applicable), engineering, manufacture, assembly, inspection, testing at manufacturer's works before dispatch, packing, supply, including insurance during transit, delivery at site, subsequent storage, civil work (if any), erection and commissioning at site.

1.2.2 The scope under this Bid covers briefly the following:

(i) All 132 kV Grid Substation Items.

(ii) Other items not specified in this specification and / or Bid form, price and other schedules but are required for the successful completion, commissioning, efficient operation & reliability of the Substation, unless specifically excluded in the specification.

1.2.3 The various item of work is described very briefly in the schedule of Bid Form, Prices & Other Schedules. The various items as defined in these schedules shall be read in conjunction with the corresponding section in the technical specifications including amendments and, additions if any. The Bidder's rates shall be based on the description of activities in the schedules as well as necessary operations detailed in Technical Specifications.

1.2.4 It is not the intent to specify completely herein, all details of design and construction of the equipment and accessories, However, the equipment and accessories shall conform in all respects to high standards of engineering, design and workmanship and be capable of performing in continuous operation up to the bidder's guarantees in a manner acceptable to the Purchaser, who will interpret the meaning of drawings and specifications and shall be entitled to reject any work or material which in his judgement is not in full accordance therewith.

1.2.5 Whether called for specifically or not, all accessories and work required for the completion of the work are deemed to be considered as a part of the bidder's scope of supply, unless and until mentioned very clearly in exclusions.

1.2.6 The rates quoted shall include minor details which obviously and fairly intended, and which may not have been included in these documents but are essential for the satisfactory completion of the various works.

1.2.7 The rates quoted shall be inclusive of all plant equipment, men, material, skilled & unskilled labour etc. essential for satisfactory completion of various works.

1.2.8 All measurements for payment shall be in SI Units (if applicable); lengths shall be measured in meters corrected to two decimal places. Areas shall be computed in square metres and volume in cubic metres, rounded off to two decimal places.

ANNEXURE – I

TECHNICAL SPECIFICATION OF 132 KV GRID SWITCHYARD AND BAY EQUIPMENTS

1. **132 KV SF6 SIRCUIT BREAKER**
2. **33 KV CIRCUIT BREAKER**
3. **132 KV CURRENT TRANSFORMER**
4. **33 KV CURRENT TRANSFORMER**
5. **132 KV BUS PT**
6. **33 KV POTENTIAL TRANSFORMER**
7. **132 KV CVT**
8. **132kV & 33 KV SURGE ARRESTOR**
9. **132 KV & 33 KV ISOLATOR**
10. **132 KV & 33 KV CONTROL AND RELAY PANELS**
11. **11kV VCB INDOOR PANEL**
12. **SYNCHRONIZING TROLLEY PANEL**
13. **TIME SYNCHRONIZATION EQUIPMENT AND TIME SYNCHRONIZER**
14. **PLCC EQUIPMENTS**
15. **220V 100A (450AH) BATTERY CHARGER AND BATTERY BANK**
16. **110V 100A (250AH) BATTERY CHARGER AND BATTERY BANK**
17. **50V 100 AH BATTERY CHARGER AND BATTERY BANK**
18. **DIAGNOSITCS TOOLS**

CIRCUIT BREAKER

TECHNICAL SPECIFICATION FOR CIRCUIT BREAKERS

1. SCOPE

This specification covers design, manufacture, assembly, testing at manufacturer's works of SF6 Circuit Breaker of 420KV, 245 KV, 145KV & Vacuum Circuit Breaker of 36 KV class (Outdoor) as detailed in the enclosed Schedule, complete with accessories required for efficient and trouble free operations.

The circuit breakers offered shall be as per specific technical parameters and suitable for outdoor installation.

The circuit breakers are required complete with structures, operating mechanism, all associated accessories and auxiliaries.

2. STANDARDS

The equipment to be furnished under this specification, shall unless and otherwise stated, be designed constructed and tested in accordance with the latest revisions of Indian Standards as follows :

IS-13118	-	General requirements for circuit breakers for voltages above 1000
V IS-9135	-	Guide for testing of Circuit Breaker
IS-2099	-	Bushings
IEC	-	376, 376A, 376B - SF6 Gas
IEC	-	62271-100
IEC	-	60694
IEC	-	56

3. I) DEVIATION

Normally the offer should be as per Technical Specification without any deviation.

II) MODIFICATION:

If any modification felt necessary to improve performance, efficiency and utility of equipment, the same must be mentioned in the 'Modification schedule' with reasons duly supported by documentary evidences and advantages. Such modifications suggested may or may not be accepted, but the same must be submitted along with Pre-Bid Queries. The modifications not mentioned in Schedule will not be considered.

4. GENERAL INFORMATION

The circuit breakers of 145 KV to 420 KV Class shall be outdoor type SF6 and 36 KV Class shall be outdoor type vacuum circuit breaker.

The equipment covered by this specification shall be complete in all respects. Any material or accessory which may not have been specifically mentioned but which is usual or necessary for satisfactory and trouble-free operation shall be within the scope of supply without any extra charge to the MePTCL.

Schematic diagram of Circuit Breaker shall be same as per our standard drawings which will be furnished to the successful bidder for all voltage class from 36 KV to 420KV. Two nos. trip coils shall be provided for circuit breaker for 36 KV to 145 KV voltage class and two nos. trip coil for each pole of 245KV & 420KV circuit breaker (each pole operated individually).

The support structure of Circuit Breaker as well as control cabinet shall be hot dip galvanized. All other parts shall be painted as per Specification.

5. DESIGN CRITERIA

5.1. The Circuit Breakers shall be used in neutral solidly ground system with symmetrical fault level of 50KA for 1 sec., 40KA for 3 sec., 31.5 KA for 3 second and 25 KA for 3 sec at system voltage of 400KV, 220KV, 132KV& 33KV respectively. 33KV system for 132/33KV transformer is non-effectively earthed through earthing transformer.

5.2. All controls shall be suitable for 85% to 110% for closing and 70% to 110% for tripping of 220 Volts (±10%) D.C supply voltage for 33 KV & above . The A.C. supply shall be available at 400 V (±10%), 50 c/s, 3 phase 4 wire system or 230 V (±10%), 50 c/s, 1-ph 2-wire system.

5.3. Radio interference voltage shall not exceed 1000 micro volt when the equipment will be operated at maximum service voltage for circuit breakers rated 132KV and above.

5.4. The maximum temperature attained by any part of the equipment at specified rating should not exceed the permissible limits as stipulated in relevant standards. Equipment shall be designed taking 50ºC as maximum ambient temperature.

5.5. The minimum safe clearance of all live parts of the equipment shall be as per relevant standards and electricity rules. Clearance of Phase to Phase low level pipe bus are as follows :

	400KV	220KV	132 KV	33 KV
Phase to Phase (mm)	7000	4500	2700	1500

5.6. In case of gang operated breaker of 145 KV to 36 KV class, the minimum clearance between poles shall not be less than 1220 mm & 430 mm respectively and shall withstand the impulse/power frequency level as specified in our technical parameters.

5.7. Provision of electrical interlocks for safe and satisfactory operation of the Breaker shall be furnished. The interlocking device shall be of proven quality.

5.8. The breaker shall be able to function even under conditions of phase opposition that may arise due to faulty synchronisation or otherwise as per relevant IS standard or IEC Standard.

5.9. 420KV, 245KV breaker shall be suitable to make & break magnetizing current of 315MVA, 400/220/33KV, 160MVA, 220/132/33KV transformers respectively without exceeding the peak value as indicated in the following Table I. 145KV breaker shall be suitable to make and break magnetizing current of 160MVA, 220/132/33KV transformer without exceeding the peak value as indicated in the following Table I.

Table I

Suggested values of maximum permissible switching over-voltages when Interrupting line-charging, Cable charging and single capacitor bank breaking current

Rated Voltage (RMS Value)	Rated Lightning Impulse Voltage (Peak Value)	Maximum Permissible Switching Over Voltage to Earth			
		A		**B**	
(KV)	(KV)	Peak Value (KV)	Col (3) Col (1) sqrt (2/3) (PU)	Peak value (KV)	Col (5) Col (1) sqrt (2/3) (PU)
1	**2**	**3**	**4**	**5**	**6**
36	170	112	3.8	73	2.5
145	650	415	3.5	297	2.5
245	1050	600	3	400	2
400	1425	895	2.6	688	2

5.10. Breaker shall be capable of interrupting line/cable charging current as per IEC without any restriking and without use of opening resistors.

5.11. The breaker shall be capable of interrupting rated breaking current with recovery voltage equal to maximum line service voltage and at all indicative power factor of the circuit equal to or exceeding 0.15.

5.12. Breaker shall be capable of clearing short line fault without excessive rise of restriking voltage.

5.13. The breaker shall be suitable for interrupting low inductive currents (0.5A to 10A) as well as capacitance, without undue over voltage.

5.14. The Bidder may indicate in his offer the methods adopted for limiting over voltages.

5.15. The circuit breaker of 420KV, 245 KV, 145KV & 36KV rating shall be capable to withstand power frequency over voltage as per value specified in IEC 62271-100 or relevant IS.

5.16. Operating duty of all circuit breakers from voltage range 36 KV to 420KV shall be as follows :

O-0.3 sec-CO-3.0 min-CO

5.17. The breaker shall be re-strike free and possible fitted with switching resistor for 420KV voltage class to limit the switching surge voltage equal to or less than 2.3 P.U. 420KV breaker shall be suitable for making and breaking magnetizing current of 315MVA, 400/220/33KV transformer and shunt reactor of capacity of 80MVAR not exceeding 2.3 P.U. of normal phase voltage to ground. 420KV breaker shall withstand the switching in and out of 400KV Shunt Reactor for any value from 50MVAR to 80 MVAR without giving rise to over voltage more than 2.3 P.U.

5.18. The Circuit Breaker shall be re-strike free as per IEC under all duty conditions and shall be capable of performing their duties without opening resistors.

5.19. The Circuit Breaker shall meet the duty requirement of any type of fault or fault location also for switching when used on 420/245/145KV effectively grounded system and 33KV ungrounded system for 33KV tertiary as well as non-effectively grounded but with Earthing transformer for 220/132/33KV & 132/33KV substation and perform make and break operation as per duty cycles specified in above clause.

5.20. **PRE INSERTION RESISTOR**

420KV Circuit Breaker whenever specified shall be provided with single step pre- insertion closing resistors to limit switching surge to a value less than 2.3 P.U. The value of pre-insertion resistor and the duration of pre-insertion time shall be as given in STP. The resistor shall have thermal rating for the following duties :

i) Terminal fault :
Close …..1 Min …… Open …… Close open 2 Min …… Close …..1 Min ……Open Close Open.

ii) Reclosing Against Trapped Charges
Duty same as (i) above. The first, third and fourth closing are to be on de-energised line while second closing to be made with lines against trapped charge of 1.2 P.U. of opposite polarity.

iii) Out of Phase Closing
One closing operation under phase opposition that is with twice the voltage across the terminals.

iv) No allowance shall be made for heat dissipation of resistor during time interval between successive closing operations. The resistors and resistor supports shall perform all these duties without deterioration. Calculations and test reports of resistors proving thermal rating for duties as specified above shall be furnished along with the bid. The calculation shall take care of adverse tolerance on resistors values and time settings.

v) 420KV Circuit Breaker to be utilized for 400KV line bay and Bus Tie bay shall be provided with P.I.R.

5.21. The breaker shall be capable of interrupting steady state and transient magnetizing current corresponding of power transformers.

5.22. If specifically mentioned in BOQ, Circuit breaker shall be provided with **Control Switching device** as per relevant standard.

6. CONSTRUCTIONS

Each 145KV SF6 circuit breaker & 36KV VCB shall comprise of three identical poles linked together electro-mechanically for simultaneous operation of pole units. The circuit breaker for rating 245 KV & 420KV shall be suitable for single phase auto reclosing as well as three phase reclosing type. The Circuit Breaker for rating 145KV shall be suitable for gang operated three phase auto reclosing.

For Circuit Breaker with SF6 gas, a temperature compensated gas density monitor with gas pressure gauge and pressure switch shall be provided at a convenient place to indicate SF6 gas density and gas pressure. The circuit breaker with spring charged mechanism shall be provided with indication for **spring charged condition**.

Operation counter should be provided to monitor the no. of operations.

MAIN CONTACTS AND ARC QUENCHING CHAMBER:

The tips of the main contacts shall be of suitable design and adequately silver plated to withstand arcing.

Complete details of main contacts and arc quenching device with sectional drawings shall be furnished.

The gap between the open contacts shall be such that it can withstand at least the rated phase to ground voltage for 8 hours at zero gauge pressure of SF6 gas due to leakage. The breaker shall be able to withstand all dielectric stresses imposed on it in open condition at lock out pressure continuously i.e. 2 P.U. across the breaker continuously.

If multibreak interrupters are used, these shall be so designed that a uniform voltage distribution is developed across them. The thermal and voltage withstand of the grounding elements shall be adequate for the service condition and duty specified.

OPERATING MECHANISM:

The operating mechanism shall be electrically controlled spring /spring operated for 420KV, 245KV, 145 KV class and 36 KV class breakers.

The mechanism shall have anti-pumping and trip free circuitry. The anti-pumping arrangement shall be initiated through Normally open (NO) type auxiliary contact of circuit breaker and shall be of 'self-hold' type. Type of such mechanism shall be mentioned. Local arrangement for operating the breakers both electrically and mechanically shall be provided in addition to remote electrical operation.

The breaker with SF6 shall have gas density monitoring devices. The device shall be provided to:

a) Initiate an alarm on breaker-control panel for pressure below the normal operating range.
b) Operate lockout device of breaker in case the pressure is below the permissible value.

There shall be mechanical ON/OFF indicator and number of operation counter for each pole of breaker in case of single pole operation and one mechanical ON/OFF indicator and provision for operation counter for 3 pole gang operated breaker.

All three poles of circuit breaker shall operate simultaneously. Pole discrepancy feature shall be provided to trip the breaker if all the poles do not close/open simultaneously in case of single pole operation. For mechanically gang operated breaker pole discrepancy feature need not be provided.

The operating mechanism box shall be fixed at a suitable man working height from ground level. View glass shall be provided on hinged door at the front. Hinged door shall be properly earthed with main body through copper flexible braided conductor. In case operating mechanism box shall not be placed at a suitable man working height, platform is to be arranged /supplied for each such breaker by the contractor. Suitable arrangement at site has to be made near each breaker to climb on the platform and work comfortably.

Suitable arrangement shall have to be made for easy accessibility to the operating mechanism box. All necessary arrangements are within the scope of bidder.

Indication for spring charged condition shall be provided for breaker with spring charging mechanism. The spring charging mechanism shall be motor operated. After failure of power supply to the motor, one CO operation shall be possible with the energy stored in the operating mechanism.

SPRING OPERATED MECHANISM:

i) The circuit breaker shall be single pressure type. The design and construction of the C.B. shall be such that there is a minimum possibility of gas leakage and entry of moisture. There should not be any condensation of SF6 gas on the internal insulating surfaces of the circuit breaker.

ii) In the interrupter assembly there shall be an absorbing product box to minimize effect of SF6 decomposed products and moisture.

iii) Spring operating mechanism shall be complete with motor. Opening spring and closing springs with limit switch for automatic charging and other necessary accessories to make the mechanism a complete operating unit shall also to be provided.

iv) As long as power is available to the motor, a continuous sequence of closing and opening operations shall be possible. The motor shall have adequate thermal rating for this duty.

v) Breaker operation shall be independent of the motor, which shall be used solely for compressing the closing spring. Facility for manual charging of the closing spring shall also be provided.

vi) Closing action of circuit breaker shall compress the opening spring ready for tripping.

vii) When closing springs are discharged after closing a breaker, closing spring, shall be automatically charged for the next operation and an indication of this shall be provided in the local and remote control cabinet.

viii) Provisions shall be kept to prevent a closing operation of the breaker when spring is in partially charged condition. Mechanical interlocks shall be provided in the operating mechanism to prevent discharging of closing springs when the breaker is already in closed position.

ix) The spring operating mechanism shall have adequate energy stored in the operating spring to close and latch the circuit breaker against the rated making current and also to provide the required energy for the tripping mechanism in case of tripping energy is derived from the operating mechanism.

COMMON CONTROL CUBICLE / MARSHALLING BOX:

A free standing outdoor type weather proof common marshalling box/cubicle shall be provided to house different accessories except those which must be located in the pole unit operating box. Rubberized gaskets of durable quality shall be provided to make it water proof, dust and vermin proof. Degree of protection shall be IP-55 as per IS:13947

This outdoor cubicle shall be of 3.00 mm thick steel sheet and shall have hinged doors at front and rear for access to the mechanism. Doors should be of proper design & adequate MS sheet thickness and providing adequate stiffener, for smooth opening and closing. There shall be arrangement for padlocking, individual door panel should be connected with the main panel body by flexible braided copper conductor for earthing purpose at two points.

A removable gland-plate, 3.00 mm thick shall be provided at the bottom of the cubicle for cable entry. Gland sizes shall be suitable for entry of adequate number of multicore cables separately for AC & DC as per approved scheme.

Terminal blocks for AC & DC shall be kept isolated. Terminals shall be suitable for at least three nos. 2.5 mm sq. copper leads. All control wiring shall be of 1100 Volt grade 2.5 mm sq. copper PVC insulated cables.

Thermostat controlled heaters shall be provided to prevent condensation within the cubicle /switchgear. Cubicle illumination lamps with switch shall be provided.

A 230 Volt combined 5A/15A three pin socket with neutral earthing and a control switch shall be provided inside the box.

Suitable arrangement i.e. platform shall be provided with support structure for easy access to the operating mechanism box for personnel of average height. View glass shall be provided on hinged door for reading pressure gauge, ON-OFF indication mounted inside the cubicle.

For 145 KV one number and for 420KV & 220KV, 3 nos. SF6 gas density monitor with pressure gauge shall be provided on this operating mechanism box / marshalling box where applicable. Density monitor contacts and pressure switch contacts of SF6 gas shall have alarm and lock out contacts. These contacts shall be suitable for direct use as permissible in closing and tripping circuit. Separate contacts have to be used for each of tripping and closing circuits. Spring charged mechanism shall be placed within the operating mechanism box / marshalling box and contacts shall be provided for spring charged indication.

All controls, alarms, indications and interlocking devices furnished with breaker shall be wired up to the terminal block in common operating box / marshalling box. Not more than two wires shall be connected to one terminal. All spare contacts available in the pressure switches etc shall be wired upto terminal block.

All wires shall be identified at both ends with ferrule marking in accordance with approved wiring diagram.

The terminal blocks shall be of 1100 V grade "Elmex" / "Connectwell"make and have continuous rating to carry the maximum expected currents on the terminals. Insulating barriers shall be provided between the terminals. The terminal block shall have locking arrangement to prevent its escape from the rails. The terminal blocks to be provided shall be fully enclosed with removable covers and made of moulded, non-inflammable plastic material. All terminals shall be clearly marked with identification numbers or letters to facilitate connection to external wiring. At least 20% spare terminals shall be provided.

Power and control cables between individual pole operating box for 245 KV and 420KV breakers shall be in the scope of supply.

INSULATORS :

The porcelain to be used in bushing shall be homogeneous, free from laminations, cavities and other flaws which may impair its mechanical and/or dielectric strength and shall be glossy, tough and impervious to moisture.

The bushings shall have adequate mechanical strength and rigidity for conditions under which they will be used.

Bushing insulation shall be coordinated with that of Circuit Breaker. The puncture strength of the bushings shall be greater than the dry flashover value.

When operating at rated voltage and under operation in heavily polluted area, there shall not be any electrical discharge between bushing terminal and earth. No radio disturbance shall be

caused by the bushings when operating up to the maximum system voltage. It shall also be free from corona.

All iron parts shall be hot dip galvanised.

All bushings of identical rating shall be interchangeable. Each bushing shall be provided with :

Terminal connector suitable for connection to either 'ACSR' Conductor / Aluminium pipe shall be provided as per requirement. Particulars of 'ACSR' Conductor / Aluminium pipe to be connected with terminal of different voltage classes are specified under Specific Technical Parameters.

All terminal connectors required for circuit breaker shall be guided by technical specification for Clamps and Connectors. Relevant drawings are to be submitted for approval before supply.

AUXILIARY CONTACTS :

The breaker shall be provided with 9 NO + 9 NC for 420KV, 245KV, 145KV and 6 NO + 6 NC for 36KV CBs as spare auxiliary / multiplied contacts in addition to the auxiliary contacts required for breaker's own operational requirements. In case of 245KV and 420KV CBs requirement of spare auxiliary contact shall be per pole basis.

The auxiliary / multiplied contacts shall have continuous current rating of at least 10 A. The breaking capacity shall be adequate for the circuits controlled, and at least 2 A at 220 V DC for inductive circuit with time constant of minimum 20 ms.

All auxiliary / multiplied contacts shall be wired up to terminal block in the control cubicle.

Auxiliary/multiplied contacts shall be suitably protected against arcing. Insulating materials of the base of the contacts shall be moulded plastic or other non-breaking, non-inflammable insulating material.

7. GROUNDING

Circuit Breaker shall be provided with two grounding terminals suitable for connecting G.S. Flat of 50×10mm (min) for all voltage classesper pole each with tapped holes. Necessary stainless steel bolts and washers, spring washers are to be supplied for connection to grounding strip, size of which shall be as per requirement.

8. PAINTING

Painting should be suitable to withstand hot and humid tropical weather. All steel surfaces shall be cleaned with sand blasting shall be given a coat of high quality red oxide or other suitable primer and shall be finished with two coats of synthetic enamel paints of shade 631 of IS – 5.

9. EQUIPMENT FOUNDATION AND SUPPORT STRUCTURE

All equipment shall be furnished complete with hot dip galvanised steel support structure, anchor / foundation bolts and hardware.

Suitable holes with bolts and washers shall be provided on structure for connection to grounding strip. Foundation design and details of calculations for Dynamic Stability of the Support Structure shall have to be submitted for approval. Confirmation towards Dynamic Stability is to be made. Detail structure drawing incorporating dimensions of all components, Bill of Materials etc shall have to be furnished for approval.

10. SF6 CIRCUIT BREAKER

10.1. The circuit breakers of 145 KV to 245 KV voltage class shall be of single pressure throughout the interrupting chamber. The breakers for 400KV system may be multibreak type with grading capacitor for keeping the interrupting voltage distribution across each breaker same.

10.2. Design and construction of the breaker shall be such that there is minimum possibility of gas leakage and no ingress of moisture.

10.3. Interrupter assembly shall be provided with absorbing elements for absorption of SF6 decomposed products and moisture in operation.

10.4. For 245 KV Class and 420KV Class each pole shall from an enclosure filled with SF6 gas independent of the other two poles. Density of each pole shall be monitored by providing density monitor with gas pressure gauge for each individual pole at a position suitable for measuring SF6 gas density and gas pressure of all the poles.

For 145KV a common gas density monitor with common gas pressure gauge shall be provided for monitoring gas density and gas pressure of all the three poles.

10.5. The pressure release device, if necessary, shall be so arranged to minimise danger to the operator in the event of gas or vapour escaping under pressure.

10.6. Sufficient SF6 gas shall be provided to fill all the poles of each circuit breaker.

10.7. Density monitor shall be temperature compensated and it shall meet the following requirements:

i) It shall be possible to remove the density monitor for checking/replacement without draining the SF6 gas by using suitable valve.
ii) It shall damp the pressure pulsation while filling gas in service so that pressure switch does not operate on such pulsation.

10.8. All piping for SF6 gas with associated valves, fittings, clamps and hardwares shall be furnished to make the system complete in all respects. Pipe bend shall be of cold bending. Pipe joints shall be totally leak proof.

11. SULPHUR HEXAFLUORIDE (SF6) GAS

11.1. SF6 gas shall comply with IEC-376, 376A and 376B and shall be suitable in all respect for use in the breaker under operating condition.
11.2. The high pressure cylinders in which SF6 gas will be shipped and stored at site shall comply with requirements of the IS-4379 or equivalent. IEC regarding identification of the contents of Industrial gas cylinder and IS-7311 or equivalent IEC regarding seamless high carbon steel cylinder for permanent and high pressure liquefiable gases.
11.3. One no. of Portable kit for filling & evacuation of SF6 gas comprising of vacuum pump, adopter and other accessories in one housing etc complete to be supplied. For each existing substation you will have to supply one no. gas filling arrangement comprising of hose pipe and adapter be fitting for breaker & SF6 gas cylinder side.

12. 36 KV VACUUM CIRCUIT BREAKER :

Each vacuum Circuit breaker shall comprise of three identical poles linked together electrically and mechanically for synchronous operation.

12.01 VACUUM INTERRUPTER AND CONSTRUCTIONAL FEATURE

The vacuum interrupter, consisting of fixed contact and moving contact, shall be interchangeable among the same type interrupter. Short circuit capacity of vacuum bottle should be 25 KA and **design life should be 100 nos. operation at rated short circuit level.**

i) Constructional features of the vacuum chamber along with its functional arrangements are to be shown in a drawing submitted along with tender documents.

ii) The gap between contacts of the Circuit Breaker inside interrupter should be capable of withstanding 1.5 time voltage to neutral at one atmospheric pressure at normal ambient condition within Breaker in the event of vacuum pressure drop due to leakage.

iii) The circuit breakers and their components shall be capable of withstanding the mechanical forces and thermal stresses of the short circuit current of the system without any damage or deterioration of material.

iv) The circuit breakers shall have motor wound spring charged trip free mechanism with antipumping feature, and shunt trip. In addition, facility for manual charging of spring, shall be provided.

v) Each breaker shall be provided with manual close & open facility, mechanical ON-OFF indication, an operation counter and mechanism charge/discharge indicator.

vi) For motor wound mechanism, spring charging shall take place automatically after each breaker closing operation. One open-close-open operation of the circuit breaker shall be possible after failure of power supply to the motor. A visual mechanical indicating device will also be provided to show the position of the spring.

12.02 36KV VCB, with duty cycle O- .3sec CO-3min CO, Class- C2-M2 as per relevant IEC, 1250A, 25KA for 3 sec, 70kvrms/170kvp, 3-Phase, Outdoor VCB with 2TC & 1CC, 220V DC.

12.03 The offered VCB shall be well proven in MePTCL & other Power utility. Offered bottle shall be identical with Type tested one. Brochures/leaflet on technical data sheet for vacuum bottle shall also to be submitted.

12.04 The VCB shall be complete with structure, operating mechanism in a common Control cubicle with degree of protection IP-55, situated at accessible man height, along with all associated accessories and auxiliaries and terminal connector as per specification and approved drawing during detailed engineering. The supply shall include 5% of offered Vacuum Interrupter bottle as spares subject to minimum Of 1 number.

12.05. The bidder shall submit detailed as well as complete Type test reports as stipulated in relevant IS and IEC with complete identification, date and serial no. of circuit breakers of identical

design with identical bottle from CPRI, NABL accredited/a Government recognized test house or laboratory during detailed engineering.

12.06. Make & Type of VCB & Vacuum Interrupter with detailed literature shall be furnished along with bid.

13. GUARANTEE :

Electrical characteristics shall be guaranteed by the bidder. In case of failure of materials to meet the guarantee, MePTCL shall have right to reject the material. Guaranteed Technical Particulars are to be submitted by successful bidder during detailed engineering along with submitted drawings/documents. However format for submission of GTP shall be handed over to intending bidders at the time of sale of tender documents.

14. CONTRACT DRAWING AND CATALOGIE

After placement of L.O.A. six (6) copies of various drawings, data and write up as listed below shall be submitted for approval as well as for reference as applicable. In all drawings, manuals etc. reference no. of L.O.A. shall be indicated.

14.1. Dimensional General Arrangement drawing showing all dimensions and disposition of fittings and space requirement and mounting/fixing arrangements.

14.2. Sectional views of contact assembly, operating mechanism and arc extinguishing chamber.

14.3. Transport/shipping dimensions with weights.

14.4. Foundation and anchor details including dead-load and impact load with direction and also point of application.

14.5. Assembly drawing for erection at site with part numbers and schedule of materials.

14.6. Electrical schematic and wiring diagram with explanatory notes, if any.

14.7. Schematic flow diagram and layout drawing of SF6 filling device. Also drawing of spring charged operating mechanism schematic layout drawings, as applicable.

14.8. Structural Drawing incorporating all dimensions of each component, BOM, etc

14.9. Name plate drawing and any other relevant drawings and data necessary for erection, operation and maintenance.

14.10. Outline drawings of bushings, terminals and terminal connectors.

14.11. The contractor shall submit four (4) sets of approved drawings both in hard and soft copy for each type of circuit breaker per sub-station for distribution purpose. Six copies of instruction manuals in binding form for each type of CB per substation and data sheets for each rating of equipment shall be submitted. The manuals shall clearly indicate the installation methods, checkups and tests to be carried out for testing the equipment and maintenance procedure.

15. TEST AT FACTORY AND TEST CERTIFICATES

All Acceptance tests shall be carried out at manufacturer's works in presence of the MePTCL as per relevant IS & IEC. In addition to above, all routine tests are also to be carried out on the breakers as per relevant IS & IEC. The entire cost of acceptance and routine tests that are to be carried out as per relevant IS shall be treated as included in the quoted price of breakers. The contractor shall give at least 15 (fifteen) days advance notice intimating the actual date of inspection and details of all tests that are to be carried out from the date when the tests will be carried out. Selection of samples for Acceptance Test as well as rejection and retesting shall be guided by relevant IS & IEC.

Routine tests report of each breaker are to be submitted along with inspection offer. Acceptance test report shall be furnished in Three (3) copies along with soft copy to the Chief Engineer, Engg. Deptt.

16. TEST REPORTS AND TYPE TESTS

Only type tested Circuit Breaker from the maker's list of MePTCL are to be offered conforming to our technical specification, and relevant IS and IEC. Circuit Breaker offered should be similar with ones on which type testing has been carried out as per relevant IS and IEC. Three sets of complete type test reports carried out in Govt. recognized Test House or Laboratory /NABL accredited laboratory shall have to be submitted by successful bidder positively along with submission of drawings during detailed Engineering. Successful bidder may require producing original copies of type test reports at the time of detail Engineering if asked by MePTCL.

Each type test report shall comply the following information with test result

i) Complete identification, date and serial no.
ii) Relevant drawings as documented with test report.
iii) Method of application, Where applied, duration and interpretation of each test.
iv) Bidder shall quote price for carrying out type tests if mentioned in the schedule for type test charges on 400KV Circuit Breaker so that the same can be carried out as per option of MePTCL. The price shall be considered for the purpose of evaluation of bids.

17. SPECIFIED LIMIT OF AUXILIARY SUPPLY VOLTAGE

i) The auxiliary supply voltage for 36 KV to 420KV class breakers shall be 85% to 110% of the rated 220 V DC supply for closing coil and the same shall be 70% to 110% for tripping coil.
ii) The operating voltage for motor operated spring charged mechanism shall be 400 V AC, 3-phase, 50 Hz or 230 V, 1-phase, 50 Hz. The motor shall operate at a voltage variation of 85% to 110% of the supply voltage.

18. NAME PLATE

i) Rated voltage/Maximum voltage
ii) Rated insulation level
iii) Model No./Sl. No./Year of manufacture
iv) Rated current
v) Rated frequency
vi) Rated short circuit breaking current
vii) Class of breaker(36KV) M2-C2
viii) Rated transient recovery voltage for terminal fault

ix) Rated short circuit making current
x) Rated operating sequence
xi) Rated short time current
xii) Rated line charging/breaking current
xiii) Rated cable charging current
xiv) Rated single capacitor bank charging/breaking current
xv) Rated small inductive breaking current
xvi) Rated supply voltage of auxiliary circuits xvii)Applicable standard

Any other information as per requirement of MePTCL to be indicated during approval of drawing shall have to be included in the nameplate.

19. AVAILABILITY OF SPARE

The successful bidder shall submit manufacturer's undertaking during submission of drawings of Circuit Breaker that the spares for the supplied breaker(for all voltage classes and all makers) shall be available for at least ten years from the date of placement of LOA. All the participating bidders shall have to confirm in writing through Cover-II submission that the above mentioned undertaking from the manufacturer shall be submitted in case they receive order.

20. ACCESSORIES

Each breaker shall be furnished complete with fittings and accessories as listed below (The list is illustrative & not exhaustive) :

i) Base frame and foundation/anchor bolts.
ii) Operating mechanism, trip and close coils, pole discrepancy feature and low pressure blocking device, auto reclosing device wherever required.
iii) Set of valves, gas pressure gauges and pressure switches. Temperature compensated gas density monitor.
iv) Auxiliary contacts and relays/contacts.
v) Local/Remote selector switch and Close/Trip Control Switch.
vi) Manual close and trip devices.
vii) Mechanical ON/OFF indicators.
viii) Operation counter.
ix) Weatherproof Control cubicle and operating mechanism boxes, with locking arrangement.
x) Set of Switch-fuse/MCB/MCCB units for A.C. & D.C. supply.
xi) Pipings of SF6 system.
xii) Space heaters with thermostat and switch.
xiii) Cubicle illumination lamp with switch.
xiv) Terminal blocks and internal wiring.
xv) G.I. Conduits and accessories for connection between Central Control Cubicle and operating mechanism boxes where applicable.
xvi) SF6 gas filling/Monitoring device.
xvii) Breaker absorbent in sufficient quantity.
xviii) Sufficient spare quantity of SF6 Gas filled Cylinders.
xix) Portable kit for filling and evacuating SF6 gas with all accessories as per Cl. no. 11.3 of this technical specification.
xx) Other standard accessories which are not specified but are necessary for efficient and trouble free operation shall be within the scope of supply.

SPECIFIC TECHNICAL PARAMETERS

Sl.no	Description	400KV	220KV	132 KV	33 KV
01	Service	Outdoor	Outdoor	Outdoor	Outdoor
02	Type	SF6	SF6	SF6	Vacuum
03	Auto Reclosing	1 Ph./3 Ph.	1 Ph./3Ph.	3ph	3 ph
04	Rated frequency (Hz)	50	50	50	50
05	i) Nominal system voltage (KV)	400	220	132	33
	ii) Rated voltage (KV)	420	245	145	36
06	System neutral Earthing	Effectively Earthed	Effectively Earthed	Effectively Earthed	NEE through Earthing Transformer
07	Insulating level (KVp) 1.2/50 micro- Sec impulse withstand volt. a) between line terminals and ground (KVP) b) between terminals with circuit breaker open	±1425 ±1425 impulse on one terminal and 240KVp Power frequency voltage of opposite polarity on other terminal	±1050 -	±650 -	±170 -
08	i) 1 min power frequency withstand voltage (KV rms) (dry & wet) a) between line terminals and ground b) between terminals with Circuit breaker open ii) 250/2500 switching impulse withstand voltage (dry & wet) a) between. line terminal and ground (KVP) b) between terminal with circuit breaker open	520 610 ±1050 900KVp impulse on one terminal and 345KVp PF voltage of opposite polarity on other terminal	460 -	275 -	70 -

08	Rated current (Amps.) (i) Continuous	2000	2000/1600	2000/1600	1250
	ii) Short time rating(KA)	50 for 1 sec.	40 for 3 seconds	31.5 for 3 seconds	25 for 3 seconds
09	Min. Creepage distance (mm) bet. ph. to ground and bet. CB terminals (Heavily polluted atmosphere).	10500 in each case	6125	3625	900
10	Rated Breaking time (m.sec.)	40 m. sec.	Not exceeding 60 millisec		
11	Total Closing time (m.sec.)	Not exceeding 120 millisec			
12	Rated line charging breaking current (Amps)	400	125	50	-
13	Rated cable charging breaking current (Amps)	400	250	160	50
14	Rated single capacitive making /breaking current (Amps) Within permissible switching over voltage (As per Table I)	-	250	160	50
15	Rated small inductive making/breaking current within permissible switching over voltage (As per Table I)	Eqvt. tomagn. current of 315 MVA,400/220/33 KV Tr. and 80MVAR Shunt Reactor	Eqvt. tomagn. current of 160 MVA, 220/132/33 KV Trf.	Eqvt. Tomagn.current of 160 MVA, 220/132/33 KV Trf. IV side	-
16	Rated operating sequence (O – Operating, C – closing)	O-0.3 sec- CO – 3.0 min-CO			
17	Operating mechanism	Spring/Spring	Spring/Spring	Spring/Spring	Spring/Spring
18	Mode of operation	Individual Pole Operated	Individual Pole Operated	Gang Operated	Gang Operated
19	No. of trip coils	2 per pole	2 per pole	2 common for 3 pole	2 common for 3 pole
20	Trip coil and closing coil voltage (DC volt)	220	220	220	220
21	Phase to phase clearance of pipe bus(mm)	7000	4500	2700	1500
22	Minimum clearance of live parts in air and ground (mm)	8000	5500	4600	3700
23	First pole to clear factor	1.3	1.3	1.3	1.5
24	Altitude above mean sea level (meter)	Not exceeding 1000			

25	Terminal connectors suitable for ACSR connection/Aluminium pipe	Moose/4″	Moose/3″	Moose/ Panther /2.5″	Moose/ Panther/ 1.5″

26	Supply voltage for operating device	400 V, 3-Phase, 50 Hz or 230 V, 1-Phase, 50 Hz			
27	Corona extinction voltage (KVrms) (Min.)	320			
28	Max. radio interference voltage (micro volts) between 0.5 MHZ and 2 MHZ in all position of equipment	1000 (at 266 KVrms)	1000 (at 156 KVrms)	500 (at 92KVrms)	
29	Thermal rating of auxiliary contacts.	10 A at 220V DC			
30	Breaking capacity of auxiliary contacts.	2A DC with circuit time not less than 20 ms.			
31	Seismic acceleration	0.3g horizontal			
32	Rated line charging breaking current (Amp)	400	125	50	10
33	Rated cable charging breaking current (Amp)	400	250	160	50
34	Rated transient recovery voltage (TRV) (TRV peak valve-KV)	624	364	215	62
35	Rated transient recovery voltage for out of phase breaking (KV) in earthed neutral system	857	500	296	92 (other than earthed neutral system)
36	Rating of Pre-insertion resistor (Ohm)	400	NA	NA	NA

CURRENT TRANSFORMER

TECHNICAL SPECIFICATION FOR CURRENT TRANSFORMER

1. SCOPE :

This specification covers the design, manufacture, assembly, testing at the manufacturer's works of SF_6 filled current transformers of 400KVvoltage class & Oil filled Current Transformers of 400KV, 220KV, 132KV & 33KV voltage class.

2. STANDARD :

The current transformers and accessories covered by this specification shall comply with the requirement of the latest edition of the following standards unless otherwise stated in this specification.

IS:2705 (Part-I-IV)	:	Specification for current Transformers.
IS:4201	:	Application guide for current transformers.
IS:5621/2099	:	Specification for Bushings/hollow insulators for alternating voltages above 1000V.
IS:335	:	Specification for insulation oil for transformers and switchgears
IEC: 60044-1	:	Current Transformer.
IEC: 60815	:	Guide for selection of Insulators in respect of polluted condition.
IEC: 60296		
IEC: 60376	:	SF6 gas
IEC: 61462	:	Silicon Composite Insulator

3. DEVIATION:

Normally the offer should be as per Technical Specification without any deviation. But any deviation felt necessary to improve performance, efficiency and utility of equipment must be mentioned in the Deviation Schedule with reasons duly supported by documentary evidence. Such deviations suggested may or may not be accepted by the Board. Deviations not mentioned in Deviation schedule will not be considered.

4. DESIGN & CONSTRUCTION OF SF6 FILLED CURRENT TRANSFORMERS:

The design features and construction details of current transformer shall be in accordance with the requirement stipulated in this specification and as per relevant IS.

i) The CT's shall be single phase, Live tank, SF6 filled, Hermetically sealed outdoor type with silicon composite insulator.
ii) The SF6 current transformers shall be complete in all respects and shall conform to the modern practice of design and manufacture.
iii) The SF6 current transformers shall be of low Reactance outdoor type, single phase, 50 Hz, with Silicon composite Insulators suitable for operation under the service conditions and site requirement as described in this technical specification.
iv) The maximum permissible temperature rise of the SF6 current transformer winding when carrying a primary current equal to the rated continuous current at rated frequency and with rated burden over an ambient temperature (not exceeding 50°C) and daily

average not exceeding 40°C shall not exceed the limits as specified in case of Class E insulation.

v) The SF6 current transformers shall be suitable for up right mounting on steel structures. Necessary flanges, bolts, clamp fittings etc. for base of SF6 CT shall also be supplied by the Manufacturer/Contractor.

vi) The metal tanks shall have bare minimum no. of welded joints so as to minimize possible locations of gas leakage.

vii) The head of the CT shall be made of Aluminium alloy. A steel rupture disc with suitable bursting pressure shall be provided on the top of the head to prevent any abnormal rise in the internal pressure due to any internal fault & avoid an explosion of the CT.

viii) The SF6 CT shall be complete with all accessories like primary & secondary terminals, weatherproof terminal box for secondary connection, lifting lugs, terminal connector, grounding terminals, name plate, SF6 filling valve, Silicon composite insulator, rupture disc, SF6 Pressure Gauge with two N/C contact for alarm purpose, Spacer, Head housing, outlet tube etc. Separate valve shall be provided on the equipment for connecting vacuum pump or gas filling device for topping up or removal of gas inside the equipment. Two nos. of complete gas filling device shall be within the scope of supply of the contractor for each substation without any additional price. Supply of terminal connectors shall be guided by the technical specification of Clamps & Connectors.

ix) The CT shall be provided with class - E insulation. It shall be of hermetically sealed type construction to prevent air & moisture from entering the tank. The design and construction of CTs shall be sufficient to withstand the thermal and mechanical stresses resulting from the specified short circuit currents and specified duration as mentioned in Specific Technical Parameters.

x) The core of the SF6 CTs shall be high grade non-ageing, electrical, CRGO silicon steel laminated steel of low hysteresis loss and high permeability to ensure high accuracy at both normal and over current.

xi) The exciting current shall be as low as possible and the SF6 CTs shall be capable of maintaining its rated accuracy at different burdens and within saturation limits.

xii) Rating plate marking shall be provided as per relevant clause of IS:2705 & relevant IEC.

xiii) CT Characteristics shall be such as to provide satisfactory performance as per IS:2705 for burdens ranging from at least 25% to 100% of rated burden over a range of 5% to 120% of rated current in case of metering CT cores and upto knee point voltage in case of protection CT cores.

xiv) The SF6 CT secondary terminals shall be brought out in a weatherproof terminal box. The terminal box shall be provided with glands suitable for 1.1 KV grade, steel armoured PVC insulated, PVC sheathed multicore 4 Sq.mm stranded copper conductor cable Connection between CT to CT Junction Box is to be done with 4 core copper control cable for individual core Connection between CT Junction Box to C&R Panel is to be done with 4 sq mm copper cable for individual core..

xv) The CT secondary to be used for metering and instruments shall be of accuracy class and ISF as specified. The saturation factor of this core shall be low enough so as not to cause any damage to measuring instruments in the event of maximum short circuit current.

xvi) The CT secondary to be used for protective relaying purposes shall be of accuracy class and Knee Point Voltage as specified. The magnetisation curve of the cores shall be furnished with tender.

xvii) The ratio changing arrangement shall be provided on secondary side of CT. Terminal markings for connections shall be marked on both primary and secondary terminals of each CT.

xviii) Secondary winding of 400kV CT shall be of copper only. However Primary winding of 400kV CT shall either be Aluminium or Copper.

xix) The CT shall be provided with Gas Density Monitor with separate potential free Alarm & Trip contact.

xx) Arrangement of remote monitoring for alarm or tripping shall also be provided.

xxi) Due to opening & closing of SF6 gas filling & draining valve hermetic sealing of CT shall not be disturbed.

xxii) Facility shall be provided for short circuiting & grounding of the CT sec terminals inside the terminal box.
xxiii) The CT shall provide freedom from Capacitance & tanδ measurement.
xxiv) If any auxiliary CT's are to be used in the current transformer then all parameters specified shall have to be met treating auxiliary C.T.s as an integral part of the current transformer. The auxiliary C.T. shall preferably be of inbuilt construction of the CTs or to be mounted inside secondary terminal box of Main CT.

5. DESIGN & CONSTRUCTION OF OIL FILLED CURRENT TRANSFORMERS :

The design features and construction details of current transformer shall be in accordance with the requirement stipulated in this specification and as per relevant IS.

i) The current transformers shall be complete in all respects and shall conform to the modern practice of design and manufacture.
ii) The current transformers shall be of low Reactance outdoor type, single phase, 50 Hz,self cooled oil filled with shaded porcelain bushing/Insulators suitable for operation under the service conditions as specified in the general condition of site suitable for outdoor operation.
iii) The maximum permissible temperature rise of the current transformer winding when carrying a primary current equal to the rated continuous current at rated frequency and with rated burden over an ambient temperature (not exceeding 50°C) and daily average not exceeding 40°C shall not exceed the limits as specified below :

Class of insulation	Maximum Temperature Rise (°C)
a) All classes immersed in oil	: 55°C (Measured by Resistance method)
b) Oil at the top of the tank or housing (Measured by Thermometer)	
i) With Conservator/Inert Gas	: 50°C
ii) Without Conservator/Inert Gas	: 45°C

iv) The current transformers shall be suitable for up right mounting on steel structures. Necessary flanges, bolts, clamps fittings etc. for base of CT shall also be supplied by the Manufacturer/Contractor.
v) The CT shall be complete with all accessories like primary & secondary terminals, terminal connectors, weather proof terminal box for secondary connection, lifting lugs, grounding terminals, oil sight glass, filling and draining valves and name plate.
vi) The CT shall be oil immersed type provided with class - A insulation. It shall be of hermetically sealed type construction to prevent air & moisture from entering the tank. The design and construction of CTs shall be sufficient to withstand the thermal and mechanical stresses resulting from the specified short circuit currents and specified duration as mentioned in General Technical Specification.
vii) The core of the CTs shall be high grade non-ageing, electrical, CRGO silicon steel laminated steel of low hysteresis loss and high permeability to ensure high accuracy at both normal and over current.
viii) The exciting current shall be as low as possible and the CTs shall be capable of maintaining its rated accuracy at different burdens and within saturation limits.
ix) Rating plate marking shall be provided as per relevant clause of IS:2705.
x) CT Characteristics shall be such as to provide satisfactory performance as per IS:2705 for burdens ranging from at least 25% to 100% of rated burden over a range of 5% to 120% of rated current in case of metering CT cores and upto knee point voltage in case of protection CT cores.

xi) The CT secondary terminals shall be brought out in a weather proof terminal box. The terminal box shall be provided with glands suitable for 1.1 KV grade, steel armoured, PVC insulated, PVC sheathed multicore 4 Sq. mm stranded copper conductor cable Connection between CT to CT Junction Box is to be done with 4 core copper control cable for individual core Connection between CT Junction Box to C&R Panel is to be done with 4 sq mm copper cable for individual core..

xii) The CT shall be hermetically sealed. Each CT shall be provided with oil level gauge and a pressure releasing device to just release the abnormal internal pressure.

xiii) The CT secondary to be used for metering and instruments shall be of accuracy class and ISF as specified. The saturation factor of this core shall be low enough so as not to cause any damage to measuring instruments in the event of maximum short circuit current.

xiv) The CT secondary to be used for protective relaying purposes shall be of accuracy class and Knee Point Voltage as specified. The magnetisation curve of the cores shall be furnished with tender.

xv) Upto 33 KV level the CTs must be Dead Tank type and from 132 KV onwards the CTs shall be of either Live Tank or Dead Tank type.For 132KV and onwards current transformer STUD arrangement should be in horizontal configuration.

xvi) The ratio changing arrangement shall be provided on secondary side of CT. Terminal markings for connections shall be marked on both primary and secondary terminals of each CT.

xvii) Primary winding shall be of copperfor 33KV, 132KV. For 220KV& 400KV current transformer primary winding may be Aluminum or copper considering current density for primary winding max 1.75 A/sq. mm for copper and 0.75 A/Sq.mm for aluminium.

xviii) Secondary winding of all voltage class CT shall be made of Copper.

xix) If any auxiliary CT's are to be used in the current transformer then all parameters specified shall have to be met treating auxiliary C.T.s as an integral part of the current transformer. The auxiliary C.T. shall preferably be of inbuilt construction of the CTs or to be mounted inside secondary terminal box of Main CT.

6. INSULATOR HOUSING (FOR SF6 CT) :

i) The Silicon Composite Insulator shall be of Manufacturer's make.

ii) Silicon composite insulator is to be used for SF6 filled CT as per relevant IS & IEC. The insulator housing shall be of shatter proof..

iii) The insulation of silicon composite insulator shall be co-ordinate with that of the SF6 current transformer such that the flashover, if any will occur only external to the CT.

iv) Each of the silicon composite insulators shall have creepage distance suitable for different voltage class as per specific technical parameters.

v) Cantilever strength of silicon composite insulators of SF6 CT is to be furnished.

vi) The insulator housing shall be of 'Shatter proof' high quality Silicon Composite material. The Silicon sheds shall exhibit hydrophobic property and also should be able to transfer the property of pollution layer.

vii) The insulator housing shall be of a single piece construction without any joints or coupling.

7. BUSHING (FOR OIL FILLED CT):

viii) Oil filled condenser type porcelain bushing/Insulator conforming to latest edition of IS:2099/IS:5621 shall be used for the CTs above 33KV class and up to 220KV class.The Silicon Composite Insulator shall be used for 400KV CT.

ix) Oil expansion chamber and bushing clamp shall be of high strength . They shall have smooth surface to prevent discharge taking place between the metal parts and porcelainas a result of ionisation. Ferrous Parts only shall be hot dip galvanised.

x) The insulation of bushings shall be co-ordinated with that of the current transformer such that the flashover, if any will occur only external to the CT.
xi) Each of the bushings porcelain shall have creepage distance suitable for different voltage class as specified in specific technical parameters.
xii) Cantilever strength of Bushing/insulator shall be as per Cl. No. 5.5 of IS:2099 (latest edition) for all voltage classes.

8. GROUNDING TERMINALS :

Two grounding terminals on diagonally opposite sides suitable for connecting G.S. Flat of 50×10mm for all voltage classes shall be provided.

9. SECONDARY TERMINAL BOX :

i) All secondary terminals shall be brought out in a compartment on one side of each current transformer for easy access. CT sec. terminal box shall be made of sheet steel having minimum thickness of 3 mm. However, 2 mm. thickness having power coated painting is acceptable.
ii) The exterior of this terminal box shall be hot-dip galvanized or painted.
iii) Arrangement for shorting of CT secondary terminals shall be provided in the CT secondary terminal box with supply of shorting link made of copper.
iv) The terminal box shall be provided with removable cable gland plate with provision of punching at bottom for mounting required number of cable glands of 1.1 KV grade steel wire armoured, PVC insulated PVC sheathed 4 sq.mm multicore stranded copper conductor cables. The cable glands shall be included within the scope of supply.
v) The terminal box shall be provided with a door in front so as to have easy access of secondary terminals. The door shall have a sealing/ locking arrangement and shall be suitable to prevent penetration of moisture and rain water. Degree of protection shall not be less than IP 55 as per relevant IS.
vi) All terminals shall be clearly marked with identification number to facilitate connection to external wiring with sufficient space in between.

10. PAINTING :

i) The tank and top metallic cover shall be hot-dip galvanized or painted. All steel surfaces shall be cleaned by sand blasting or chemical process as required to produce a smooth surface, free of scale, grease and dirt. However Aluminium casting CT tank with PU paint is also acceptable.
ii) Steel surface in contact with insulating oil shall be painted with heat resistant oil insoluble insulating varnish.
iii) External surfaces shall be given a coat of high quality red or yellow chromate primer and finished with two coats of synthetic enamel paints (light grey as per shade 631 of IS:5)
iv) Paints shall be carefully selected to withstand tropical heat, rain etc. The paints shall not scale off or crinkle or be removed by abrasion due to normal handling.

11. SF6 GAS:

The SF6 gas shall comply with IEC 60376; 60376A and 60376B and shall be suitable in all respect for use in the switchgear under operating condition.

12. INSULATING OIL:

Insulating oil to be used for current transformer shall be of EHV grade and shall confirm to IS:335 (required for first filling).

13. TESTS AT FACTORY AND TEST CERTIFICATES :

i) Each C.T. shall comply with the requirements of routine test as specified in IS:2705 Part (I to IV) .

ii) All Routine test at manufacturer's works on all CTs shall be carried out and Test Reports are to be submitted to MePTCL alongwith inspection call letter. For 66KV & above voltage class CT's Dielectric Dissipation Factor (tanδ) is to be measured at manufacturer's works for all CTs wherever applicable. The measured tanδ values indicating sl. No. of CTs are to be submitted alongwith submission of inspection offer.During physical inspection of CTs at the manufacturer's works officers of MePTCL shall witness Routine/Acceptance test i.r.o 10% or more as per IS/IEC for all voltage class CTs (33KV to 400KV). However tanδ value is to be measured for all CTS of 132KV & above voltage class during routine/acceptance test at the manufacturer's works in presence of representative of MePTCL.

iii) All Acceptance tests shall be carried out at the manufacturer's works on every lot offered for inspection as per relevant IS. Selection of samples for acceptance test as well as rejection and retesting shall be guided by relevant IS& IEC. The entire cost of acceptance and routine tests that are to be carried out as per relevant IS shall be treated as included in quoted price of Current Transformer. Three (3) copies of test reports shall be submitted for approval and adequate extra copies for distribution to site.

iv) The contractor shall give at least 15 (fifteen) days advance notice intimating the actual date of inspection and details of all tests that are to be carried out.

14. TEST REPORTS AND TYPE TESTS :

Only type tested Current transformers from the maker's list of MePTCL are to be offered for 400KV, 220KV, 132KV and 33KV class CT's conforming to our technical specification, and relevant IS and IEC. Current Transformer offered should be similar with ones on which type testing has been carried out as per relevant IS and IEC.Three sets of complete test report of all test (including Type Test of CT as well as for Silicon composite insulator),as stipulated in the relevant IS & IEC, carried out in Govt. recognized Test House or Laboratory /NABL accredited laboratory shall have to be submitted by successful bidder positively alongwith submission of drawings during detailed Engineering. Successful bidder may be required to produce original copies of type test reports at the time of detail engineering, if asked by MePTCL.

Each type test report shall comply with the following information with test result: -

i) Complete identification, date and serial no.

ii) Relevant drawings as documented with test report.

iii) Method of application, where applied, duration and interpretation of each test.

iv) All Type tests report which have been carried in accordance with IEC:44-1/IS:2705 including "Fast Transient Test" report to assess the CT performance having 300KV or higher voltage class in service to withstand high frequency over voltage generated due to closing &opening of isolators & Breaker

15. GURANTEE :

Electrical characteristics shall be guaranteed by the bidder. In case of failure of materials to meet the guarantee, MePTCL shall have right to reject the material. Guaranteed Technical Particulars are to be submitted by successful bidder during detailed engineering alongwith submitted drawings/documents. However format for submission of GTP shall be handed over to intending bidders at the time of sale of tender documents.

16. CONTRACT DRAWINGS AND MANUALS :

In the event of placement of order the following drawings and manuals shall be submitted in six (6) copies for approval.

a) General outline dimension drawing of current transformers furnishing front and side elevation, top and bottom plan, views showing all accessories, mounting arrangement on steel structures, spacing and size of the bolts, total creepage distance of bushing, electrical diagram for primary and secondary connections with polarity mark, terminal arrangement for secondary terminal box, size of primary terminals, grounding terminals and lifting lugs, quantity of insulating oil, net and shipping weight, shipping dimension etc.
b) Name and rating plate diagram of CT.
c) Marked erection point identifying the component parts of SF6 CT
d) Detail view of core, winding assembly, winding connections and tappings.
e) Guaranteed Technical particulars

After approval, four (4) sets of approved drawings and operating and maintenance manual including the instruction manual both in soft and hard format shall be submitted for our record and distribution to site.

Instruction manual should contain :

a) A brief description of C.T. furnishing the constructional features.
b) Instruction for handling, storing, erection, commissioning and operation and maintenance of C.Ts
c) General outline drawing of the C.Ts along with all components and accessories.
d) Marked erection points identifying the component parts of C.T.
e) Detailed dimensions of assembly and description of all accessories.
f) Detailed views of Core, winding assembly, winding connections and its tapping.
g) List of spares and other necessary information for C.Ts.
h) A set of approved test certificate.
i) All notes and legends of the drawings shall be furnished in English and all dimensions shall be marked in metric units.

Special Notes –

- **For 132KV and above rated CTs,tanδvalue of a new CT should not exceed 0.4% at 10KV & rated voltage. And it should not go beyond 0.7% during the 5 years guarantee period. During maintenance period, rate of increase of tanδshould not be more than 0.1% per year or 0.2% biannually. No temperature correction factor shall be considered. If these conditions are not maintained within guarantee period, free of cost replacement of CT will have to be done by manufacturer / turn-key contractor, as applicable.**
- **For 33KV CTS, horizontal Stud is to be provided, vertical stud is not acceptable.**
- **For 33KV and 132KV CTs, common Baseplate suitable for all the structures of that voltage class is to be designed and supplied for mounting arrangement. Reference structure drawings are given under.**

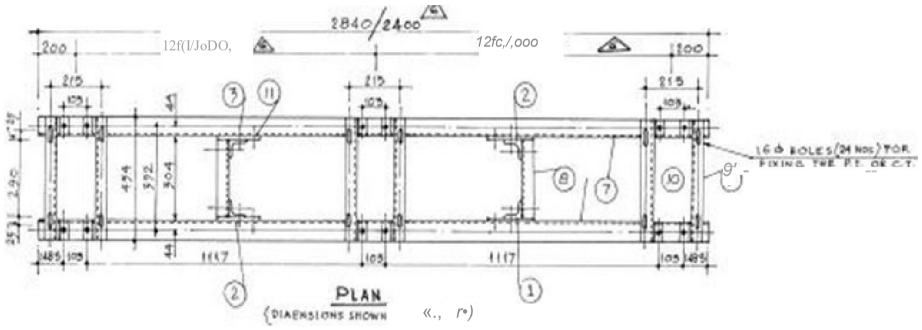

33 KV CT STRUCTURE (SST/33/167)

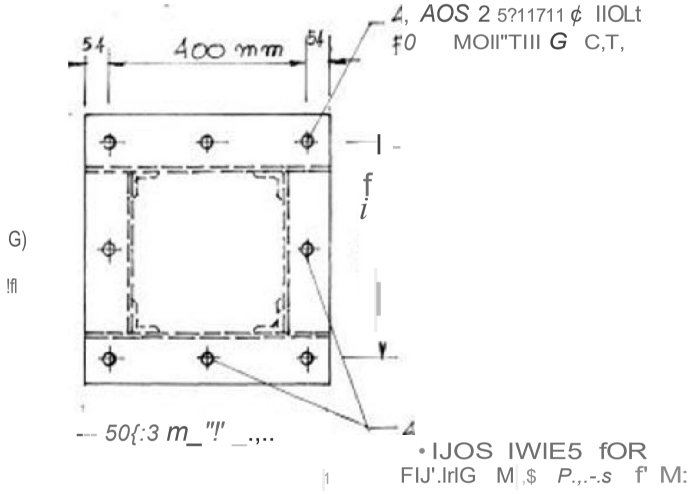

132 KV KV CT STRUCTURE (SST/141/141)

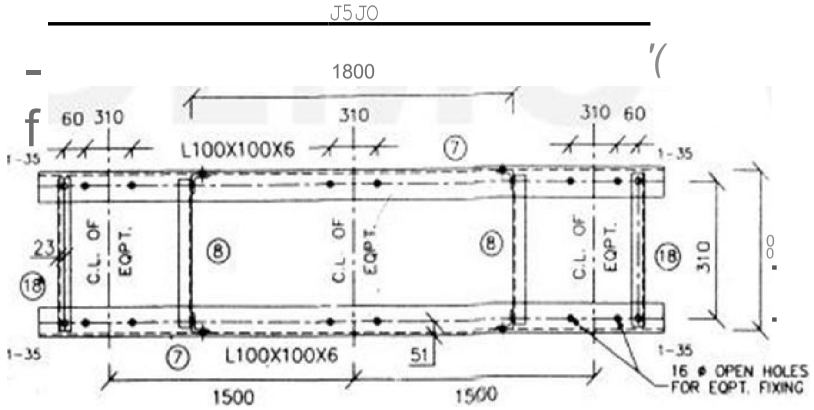

33 KV 3PH CT STRUCTURE (JBIC)

***-N6- AfJc.131, /JdL**

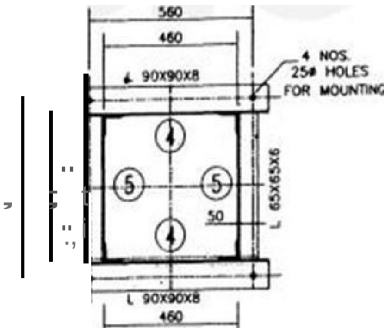

132 KV 1PH CT STRUCTURE (JBIC)

ABC/J 32/D1fC/CT3/LOT-JV

A. CORE DETAILS OF CURRENT TRANSFORMER (for AIS Sub-Station)

Sl. No.	Description	No of Core	Core No.	Application	Current Ratio	Output Burden (VA) at Lower Ratio	ISF (Max)	Accuracy class as per IS 2705	Min Knee point Voltage (V)	Max CT Secy Winding Resistance (W)	Max excitation current (mA) at Knee point Voltage
1. a)	**400 KV CT (Bay)**										
i	Feeder, Transformer, Bus Reactor, Bus Coupler & Bus Transfer Bay	5	1	Protection	2000-1000/1A			PS Class	2000/1000	10/5	30/60
			2	Protection	2000-1000/1A			PS Class	2000/1000	10/5	30/60
			3	Metering	2000-1000/1A	20	5	0.2			
			4	Protection	2000-1000/1A			PS Class	2000/1000	10/5	30/60
			5	Protection	2000-1000/1A			PS Class	2000/1000	10/5	30/60
b)	400kV CT (One & a Half Breaker GIS)										
i	Line side CT	6	4 cores	Protection	3000-2000/1A			PS Class	3000/2000	15/10	30/45
			2 cores	Metering	3000-2000-1000/1A	20	5	0.2			
ii	Tie & Bus side CT	4	4 cores	Protection	3000-2000/1A			PS Class	3000/2000	15/10	30/45
c)	**Bushing CT (Transformer)**										
i	400KV side, 220kV side & Neutral of 315 MVA, 400/220/33KV Transformer	1	1	Protection	1000/1A			PS Class	1000V	2.5	30 at Vk/2

Sl. No.	Description	No of Core	Core No.	Application	Current Ratio	Output Burden (VA) at Lower Ratio	ISF (Max)	Accuracy class as per IS 2705	Min Knee point Voltage (V)	Max CT Secy Winding Resistance (W)	Max excitation current (mA) at Knee point Voltage
d)	**Bushing CT (Bus Reactor)**										
i	400KV line side of 80MVAR Bus Reactor	4	1	Protection	200/1A			PS Class	200V	1	40 at Vk/4
			2	Protection	200/1A			PS Class	200V	1	40 at Vk/4
			3	Protection	200/1A			PS Class	200V	1	40 at Vk/4
			4	Metering	200/1A	10	5	1			
ii	Neutral side of 80MVAR Bus Reactor	4	1	Protection	2000-1000/1A			PS Class	2000/1000V	10/5	30/60
			2	Protection	2000-1000/1A			PS Class	2000/1000V	10/5	30/60
			3	Protection	200/1A			PS Class	200V	1	40 at Vk/4
			4	WTI		10					
2. a)	**220 KV CT (Bay)**										
i	Feeder, Transformer & Bus Transfer Bay	5	1	Metering	1000-800-400/1A	20	5	0.2			
			2	Protection	1000-800-400/1A			PS Class	1500/1200/600V	5/4/2	30/37.5/75
			3	Protection	1000-800-400/1A			PS Class	1500/1200/600V	5/4/2	30/37.5/75
			4	Protection	1000-800-400/1A			PS Class	1500/1200/600V	5/4/2	30/37.5/75
			5	Protection	1000-800-400/1A			PS Class	1500/1200/600V	5/4/2	30/37.5/75
ii	Bus Coupler	3	1	Metering	2000-1600/1A	20	5	0.2			
			2	Protection	2000-1600/1A			PS Class	2000/1600V	10/8	30/37.5
			3	Protection	2000-1600/1A			PS Class	2000/1600V	10/8	30/37.5

Sl. No.	Description	No of Core	Core No.	Application	Current Ratio	Output Burden (VA) at Lower Ratio	ISF (Max)	Accuracy class as per IS 2705	Min Knee point Voltage (V)	Max CT Secy Winding Resistance (W)	Max excitation current (mA) at Knee point Voltage
b)	**Bushing CT (Transformer)**										
i	220KV side, 132KV side & Neutral of 160MVA Transformer	1	1	Protection	800/1A			PS Class	1000V	2.5	30 at Vk/2
ii	220KV side & Neutral of 50MVA Transformer	1	1	Protection	400/1A			PS Class	800V	1.5	30 at Vk/2
c)	**33 KV CT for Tertiary Loading**										
i	220/132/33 KV Transformer Bay	3	1	Metering	200-100/1A	20	5	0.2			
			2	Protection	200-100/1A			PS Class	1200/600V	4/2	30
			3	Protection	200-100/1A			PS Class	1200/600V	4/2	30
3. a)	**132KV CT (Bay)**										
i	Feeder, Transformer & Bus Transfer Bay	5	1	Metering	1000-800-400/1A	20	5	0.2			
			2	Protection	1000-800-400/1A			PS Class	1500/1200/600V	5/4/2	30/37.5/75
			3	Protection	1000-800-400/1A			PS Class	1500/1200/600V	5/4/2	30/37.5/75
			4	Protection	1000-800-400/1A			PS Class	1500/1200/600V	5/4/2	30/37.5/75
			5	Protection	1000-800-400/1A			PS Class	1500/1200/600V	5/4/2	30/37.5/75

Sl. No.	Description	No of Core	Core No.	Application	Current Ratio	Output Burden (VA) at Lower Ratio	ISF (Max)	Accuracy class as per IS 2705	Min Knee point Voltage (V)	Max CT Secy Winding Resistance (W)	Max excitation current (mA) at Knee point Voltage
ii	Bus Coupler Bay	3	1	Metering	2000-1600/1A	20	5	0.2			
			2	Protection	2000-1600/1A			PS Class	2000/1600V	8/6.4	30/37.5
			3	Protection	2000-1600/1A			PS Class	2000/1600V	8/6.4	30/37.5
b)	**Bushing CT (Transformer)**										
i	132KV side & Neutral of 50MVA Transformer	1	1	Protection	400-300/1A			PS Class	800-600V	1.5	30 at Vk/2
ii	33KV side of 50MVA Transformer	1	1	Protection	1000/1A			PS Class	500	2.5	30 at Vk/2
iii	132KV side & Neutral of 31.5MVA Transformer	1	1	Protection	150/1A			PS Class	600	1.5	30 at Vk/2
iv	33KV side of 31.5MVA Transformer	1	1	Protection	800/1A			PS Class	400	2.5	30 at Vk/2
c)	**132KV CT for Railway Traction Sub-Stations& for Bulk(only for Metering purpose)**										
i	Feeder – without Circuit Breaker	2	1 & 2	Metering	200-100/1A	20	5	0.2S			
ii	Feeder – as Special	2	1 & 2	Metering	50-25/1A	7.5	5	0.2S			

Sl. No.	Description	No of Core	Core No.	Application	Current Ratio	Output Burden (VA) at Lower Ratio	ISF (Max)	Accuracy class as per IS 2705	Min Knee point Voltage (V)	Max CT Secy Winding Resistance (W)	Max excitation current (mA) at Knee point Voltage
4. a)	**33KV CT (Bay)**										
i	Feeder, Transformer, Capacitor Bank & Bus Transfer Bay	3	1	Metering	1000-800-400/1A	20	5	0.2			
			2	Protection	1000-800-400/1A			PS Class	1000/800/400	4/3.2/1.6	30/37.5/75
			3	Protection	1000-800-400/1A			PS Class	1000/800/400	4/3.2/1.6	30/37.5/75
b)	**33KV CT (Indoor Switchgear including GIS)**										
i	Transformer (In comer)	3	1	Metering	1000-800/1A	20	5	0.2			
			2	Protection	1000-800/1A			PS Class	250/200	4/3.2	30/37.5
			3	Protection	1000-800/1A			PS Class	1000/800	4/3.2	30/37.5
ii	Feeder, Capacitor Bank & Bus Transfer Bay		1	Metering	800-400/1A	20	5	0.2			
			2	Protection	800-400/1A			PS Class	200/100	3.2/1.6	37.5/75
			3	Protection	800-400/1A			PS Class	800/400	3.2/1.6	37.5/75
iii	Bus Coupler Bay	2	1	Metering	1000-800/1A	30	5	0.2			
			2	Protection (O/C & E/F)	1000-800/1A			PS	250/200	4/3.2	30 at Vk

Sl. No.	Description	No of Core	Core No.	Application	Current Ratio	Output Burden (VA) at Lower Ratio	ISF (Max)	Accuracy class as per IS 2705	Min Knee point Voltage (V)	Max CT Secy Winding Resistance (W)	Max excitation current (mA) at Knee point Voltage
5a)	**11KV CT (Bay)**										
i	Incoming Feeder	4	1	Metering	600-300/ 1A	15	5	0.5			
			2	Protection	600-300/ 1A			PS Class	300 at higher ratio	4/2 at 75°C at higher ratio	30 at Vk/2 at lower ratio
			3	Protection	600-300/ 1A			PS Class	300 at higher ratio	4/2 at 75°C at higher ratio	30 at Vk/2 at lower ratio
			4	Protection	600-300/ 1A			PS Class	300 at higher ratio	4/2 at 75°C at higher ratio	30 at Vk/2 at lower ratio
ii	Outgoing Feeder	2	1	Metering	300-150/ 1A	15	5	0.5			
			2	Protection	300-150/ 1A			PS Class	150at higher ratio	2 at 75°C at higher ratio	30 at Vk/2 at lower ratio

B. CORE DETAILS OF CURRENT TRANSFORMER (FOR GIS SUB-STATION ONLY)

Sl. No.	Description	No of Core	Core No.	Application	Current Ratio	Output Burden (VA) at Lower Ratio	ISF (Max)	Accuracy class as per IS 2705	Min Knee point Voltage (V)	Max CT Secy Winding Resistance (W)	Max excitation current (mA) at Knee point Voltage
1. a)	**400 KV CT (Bay)**										
i	Feeder, Transformer, Bus Reactor, Bus Coupler & Bus Transfer Bay	5	1	Protection	2000-1000/1A			PS Class	800@ Lowest ratio	10/5	30 @ Highest Ratio
			2	Protection	2000-1000/1A			PS Class	800@ Lowest ratio	10/5	30 @ Highest Ratio
			3	Metering	2000-1000/1A	20	5 @ all ratio	0.2			
			4	Protection	2000-1000/1A			PS Class	800@ Lowest ratio	10/5	30 @ Highest Ratio
			5	Protection	2000-1000/1A			PS Class	800@ Lowest ratio	10/5	30 @ Highest Ratio
b)	400kV CT (One & a Half Breaker GIS)										
i	Line side CT	6	4 cores	Protection	3000-2000/1A			PS Class	1000@ Lowest ratio	15/10	30 @ Highest Ratio
			2 cores	Metering	3000-2000-1000/1A	20	5@ all ratio	0.2			
ii	Tie & Bus side CT	4	4 cores	Protection	3000-2000/1A			PS Class	1000@ Lowest ratio	15/10	30 @ Highest Ratio
c)	**Bushing CT (Bus Reactor)**										
i	Neutral side of 80MVAR Bus Reactor	4	1	Protection	2000-1000/1A			PS Class	800 @ Lowest ratio	10/5	30 @ Highest Ratio

Sl. No.	Description	No of Core	Core No.	Application	Current Ratio	Output Burden (VA) at Lower Ratio	ISF (Max)	Accuracy class as per IS 2705	Min Knee point Voltage (V)	Max CT Secy Winding Resistance (W)	Max excitation current (mA) at Knee point Voltage
			2	Protection	2000-1000/1A			PS Class	800 @ Lowest ratio	10/5	30 @ Highest Ratio
			3	Protection	200/1A			PS Class	200V	1	40 at Vk/4
			4	WTI		10					
2.	**220 KV CT (Bay)**										
i	Feeder, Transformer & Bus Transfer Bay	5	1	Metering	1000-800-400/1A	20	5	0.2			
			2	Protection	1000-800/1A			PS Class	800 @ Lowest ratio	5/4	30 @ Highest Ratio
			3	Protection	1000-800/1A			PS Class	800 @ Lowest ratio	5/4	30 @ Highest Ratio
			4	Protection	1000-800/1A			PS Class	800 @ Lowest ratio	5/4	30 @ Highest Ratio
			5	Protection	1000-800/1A			PS Class	800 @ Lowest ratio	5/4	30 @ Highest Ratio
ii	Bus Coupler	3	1	Metering	2000-1600/1A	20	5 @ all ratio	0.2			
			2	Protection	2000-1600/1A			PS Class	800 @ Lowest ratio	10/8	30 @ Highest Ratio
			3	Protection	2000-1600/1A			PS Class	800 @ Lowest ratio	10/8	30 @ Highest Ratio

Sl. No.	Description	No of Core	Core No.	Application	Current Ratio	Output Burden (VA) at Lower Ratio	ISF (Max)	Accuracy class as per IS 2705	Min Knee point Voltage (V)	Max CT Secy Winding Resistance (W)	Max excitation current (mA) at Knee point Voltage
3.	**132KV CT (Bay)**										
i	Feeder, Transformer & Bus Transfer Bay	5	1	Metering	1000-800-400/1A	20	5	0.2			
			2	Protection	1000-800/1A			PS Class	800 @ Lowest ratio	5/4	30 @ Highest Ratio
			3	Protection	1000-800/1A			PS Class	800 @ Lowest ratio	5/4	30 @ Highest Ratio
			4	Protection	1000-800/1A			PS Class	800 @ Lowest ratio	5/4	30 @ Highest Ratio
			5	Protection	1000-800/1A			PS Class	800 @ Lowest ratio	5/4	30 @ Highest Ratio
ii	Bus Coupler Bay	3	1	Metering	2000-1600/1A	20	5 @ all ratio	0.2			
			2	Protection	2000-1600/1A			PS Class	600 @ Lowest ratio	8/6.4	30 @ Highest Ratio
			3	Protection	2000-1600/1A			PS Class	600 @ Lowest ratio	8/6.4	30 @ Highest Ratio

SPECIFIC TECHNICAL PARTICULARS OF CURRENT TRANSFORMER

S.NO	DESCRIPTION	TECHNICAL PARAMETERS			
			220KV	132 KV	33 KV
1.	Rated system voltage KV(rms)	400KV	220	132	33
2.	Highest system voltageKV(rms)	420KV	245	145	36
3.	Rated current(Amp)/Burden(VA)	As per schedule of requirements			
4.	System frequency (Hz)	50			
5.	System neutral earthing	Effectively Earthed		Effectively Earthed	Earthed through grounding transformer for 220/132/33KV & 132/33KV substation
6.	Installation	Outdoor			
7.	Extended current rating	120 % Max.			
8.	Rated short time thermal current for 1 second/3 second (KArms)	50 for 1 sec.	40 (3 sec)	31.5 (3 sec)	31.5 (3 sec)
9.	Rated Dynamic current KA (peak) (should be at least 2.5 times of above rating	125	100	78.8	78.8
10.	Rated Insulation level : a) 1.2/50 microsecond impulse withstand voltage (KVpeak) b) One minute power frequency withstand voltage (KVrms) on primary winding	1425 630	1050 460	650 275	170 70
11.	Power frequency over voltage withstand requirements for secondary winding for one minute (KVrms)	3			
12.	Over voltage interturn test	As per clause 9.5 of IS:2705 Part-I & relevant IEC			

.					
13.	Creepage Distance(Heavily polluted atmosphere) Total	10500	6125	3625	900
14.	Limit of temp. rise of windings ^{O}C at rated current	$55^{O}C$			

15.	Type of mounting	Pedestal Type			
16.	Insulation medium	SF6 Gas / Oil (as per schedule)	Oil		
17.	Type of Tank	Live Tank / Dead Tank			Dead Tank
18.	Insulator	Silicon Composite Insulator	Oil filled condenser type porcelain bushing/Insulator		
19.	Instrument security factor	Less than 5 for metering core			
20.	Type of connectors suitable for	4" Al. pipe/ACSR Conductor.	3" Al.Pipe/ ACSR conductor	2.5" Al.Pipe/ ACSR conductor	1.5" Al.Pipe/ACSR conductor
21.	Minimum visible Corona discharge voltage (KVrms)	320	–	–	–
22.	RIV test rms. (micro volts)	Not exceeding 1000 (at 266 KV rms)	Not exceeding 500 (at 156 KV rms)	Not exceeding 500 (at 92 KV rms)	-
23.	Partial discharge level (PC)	Not exceeding 10 PC excluding 33KV.			
24.	250/2500 micro Sec. Switching impulse withstand dry & wet (between line terminals and ground)	± 1050 KVp			
25.	Class of insulation	E or A (as per schedule)		A	

POTENTIAL TRANSFORMER

TECHNICAL SPECIFICATION FOR POTENTIAL TRANSFORMERS

1. SCOPE :

i) This specification covers the design, manufacture, assembly, testing at the manufacturer's works, supply, delivery at site of potential transformers in three phase system of 220 KV, 132 KV and 33 KV class.

ii) These potential transformers will be used as Bus-Bar P.T. for voltage indication by voltmeter through selector switch and supply of voltage to meters, high speed distance relays etc. for feeder protection and synchronisation devices.

2. STANDARD :

The potential transformers and accessories covered by this specification shall comply with the requirement of the latest edition of the following standards unless otherwise stated in this specification :

IS: 3156 Part (I-IV)	:	Specification for Voltage Transformer.
IS: 4146	:	Application guide for Voltage Transformers.
IS:2099 / IS: 5621	:	Specification for Bushings/hollow insulators for alternating voltages above 1000 volts.
IS: 335	:	Specification for Insulating Oil.
IS 3024	:	Specification for Core Materials

3. DEVIATION :

Normally the offer should be as per Technical Specification without any deviation. But any deviation felt necessary to improve performance, efficiency and utility of equipment must be mentioned in the Deviation Schedule with reasons duly supported by documentary evidence. Such deviations suggested may or may not be accepted by the Board. Deviations not mentioned in Deviation schedule will not be considered.

4. DESIGN & CONSTRUCTION OF POTENTIAL TRANSFORMERS :

The design features and construction details of potential transformers shall be in accordance with the requirement stipulated hereunder :

i) The potential transformers shall be complete in all respects and shall conform to the modern practice of design and manufacture.

ii) The potential transformers shall be electromagnetic, outdoor type, single phase, oil filled, self cooled, having shaded porcelain bushing /Insulator as per IS:2099 / IS:5621, suitable for operation under the service conditions without protection from sun, rain and dust.

iii) The maximum temperature rise at 1.2 times rated primary voltages, rated frequency and rated burden, shall not exceed the following values over the above stated maximum ambient temperature.

Class of insulation		Maximum Temp. Rise ° C
a) For winding with class A Insulation immersed in oil C (Measured by Resistance method)	:	50°
b) Oil at the top of the tank C (Measured by Thermometer)	:	40°
c) With 1.5 times rated voltage for 30 seconds	:	10°C more than above value after application of 1.2 times rated voltage for a time sufficient to reach stable thermal condition.
d) Maximum ambient temp. to be considered	:	50° C

iv) The potential transformer shall be capable to withstand line discharge effect and also the ferro resonance effect.

v) The potential transformers shall be suitable for up right mounting on steel structures. Necessary flanges, bolts, clamps fittings etc. for base of P.T. are within the scope of the supplier.

vi) The P.T. shall be complete with all accessories like Primary Terminals, weather proof terminal box for secondary connection, lifting lugs, grounding terminals, oil sight glass, pressure relief device, filling and draining plugs and name plate.

vii) The P.T. shall be oil immersed type provided with class A insulation. It shall be of hermetically sealed type construction to prevent air & moisture from entering the tank.

viii) The core of the PTs shall be high grade non-aging, CRGO silicon Steel laminated steel of low hysteresis loss and high permeability to ensure high accuracy at both normal and over voltages conforming to IS: 3024.

ix) PT Characteristics shall be such as to provide satisfactory performance for burdens ranging from at least 25% to 100% of rated burden over a range of at least 5% to 110% rated voltage in case of protective cores and a voltage range of 80% to 120% (0.8 pf lagging) in case of measuring cores.

x) The P.T. secondary terminals shall be brought out through fuse of suitable rating in a weatherproof terminal box for easy access.

xi) Coils used shall be of copper.

xii) For 220KV, 132 KV &33 KV class P.T, connection between P.T junction Box to C & R panel (For metering core only) shall have to done with 25 sq mm 3½ core PVC copper or equivalent Al. control cable. Suitable termination arrangement is to be made in the P.T junction Box as well as in C & R panel.

5. BUSHING :

i) Shaded porcelain bushing / Insulaltors conforming to latest edition of IS : 2099 / IS: 5621 shall be used for P.T.

ii) Cast metal end caps for the bushings shall be of high strength, hot-dip galvanised malleable iron. They shall have smooth surface to prevent discharge taking place between the metal parts and porcelain as a result of ionisation.

iii) The insulation of bushing shall be co-ordinated with that of the potential transformer such that the flashover, if any will occur only external to the PT.

iv) Each of the bushings shall be complete with the following :

a) Primary terminals suitable for connection through Rigid/Flexible Connectors for ACSR conductors/Aluminium Pipe bus.

b) Oil level gauge and convenient means of oil and nitrogen filling, sampling and draining of oil.
c) End shields for distribution of stresses, if required.
d) Cantilever strength of Bushing/insulator shall be as per Cl. No. 5.5 of IS:2099 (latest edition) for all voltage classes.

6. INSULATING OIL :

The quantity of insulating oil for filling of complete unit shall be stated. The oil shall comply in all respect with the provisions of the latest edition of IS: 335.

7. TERMINAL CONNECTORS :

The terminal connectors should conform to the respective specification for Clamps and Connectors.

8. GROUNDING TERMINALS :

Two grounding terminals on diagonally opposite sides of adequate size suitable for connecting G.S. Flat of 50×10mm shall be provided for all voltage classes. HV Neutral terminal earthing and body earthing should be marked distinctly and be physically well separated. The terminal of high voltage winding intended to be earthed shall be brought out through a bushing, insulated from case or frame to be earthed by a separate arrangement.

9. SECONDARY TERMINAL BOX :

i) All secondary terminals shall be brought out in a compartment on one side of each potential transformer. P.T. Sec. terminal box shall be made of sheet steel having minimum thickness of 3mm. However, 2 mm. thicknesses having powder coated painting is acceptable.
ii) The exterior of this terminal box shall be hot dip galvanised/ weather proof paints as mentioned against Item no 10 below.
iii) The terminal box shall be provided with removable cable gland plates at bottom for mounting cable glands suitable for 1.1 KV grade steel wire armoured, PVC insulated, PVC sheathed 3Cx2.5 sq. mm. stranded copper conductor cables. The cable glands shall be included within the scope of supply.
iv) The terminal box shall be provided with a door in front so as to have easy access of secondary terminals. The door shall have a sealing/locking arrangement and shall be suitable to prevent ingress of moisture and rain water. Door shall be provided with braided copper wire connecting main body with door lid for earthing purpose. The degree of protection shall not be less than IP-55 as per IS:13947
v) All terminals shall be clearly marked with identification number to facilitate connection to external wiring in accordance with relevant Indian Standards.

10. PAINTING :

i) The tank and top metallic shall be hot-dip galvanized or painted. All steel surfaces shall be cleaned by sand blasting or chemical process as required to produce a smooth surface, free of scale, grease and dirt.
ii) Steel surface in contact with insulating oil shall be painted with heat resistant oil insoluble insulating varnish.
iii) External surface shall be given a coat of high quality red or yellow chromate primer and finished with two coat of synthetic enamel paints (light grey as per shade 631 of IS:5). Paint shall be carefully selected to withstand tropical heat rain etc. The paint shall not scale off or crinkle or to be removed by abrasion due to normal handling.

11. GUARANTEE :

Electrical characteristics shall be guaranteed by the bidder. In case of failure of materials to meet the guarantee, MePTCL shall have right to reject the material. Guaranteed Technical Particulars are to be submitted by successful bidder during detailed engineering alongwith submitted drawings/ documents. However format for submission of GTP shall be handed over to intending bidders at the time of sale of tender documents.

12. CONTRACT DRAWINGS AND MANUALS :

i) In the event of placement of LOA, the following drawings and manuals shall be submitted in six (6) copies to the Chief Engineer, MePTCL, Shillong– for approval.

i) General outline dimension drawing of potential transformers furnishing front and side elevation, top and bottom plan, views showing all accessories, mounting arrangement on steel structures, spacing and size of the bolts, total creepage distance of bushing, electrical diagram for primary and secondary connections with polarity mark, terminal arrangement for secondary terminal box, size of primary terminals, grounding terminals and lifting lugs, quantity of insulating oil, net and shipping weight, shipping dimension etc.
ii) Name and rating plate diagram of P.T.

ii) After approval, ten (10) sets of approved drawings and operating and maintenance manual including the instruction manual shall be submitted to the Chief Engineer, MePTCL for our record and distribution to site. Instruction manual should contain:

i) A brief description of P.T. furnishing the constructional features.
ii) Instruction for handling, storing, erection, commissioning and operation and maintenance of P.Ts
iii) General outline drawing of the P.Ts along with all components and accessories.
iv) Marked erection points identifying the component parts of P.T.
v) Detailed dimensions of assembly and description of all accessories.
vi) Detailed views of Core, winding assembly, winding connections and its tappings.
vii) List of spares and other necessary information for P.Ts.
viii) A set of approved test certificate.

13. TESTS AT FACTORY AND TEST CERTIFICATES :

i) Each P.T. shall comply with the requirements of routine test as specified in the relevant Part (I to III) of IS:3156 and IS:4146.

ii) Routine test at manufacturer's works shall be carried out and Test Reports are to be submitted to MePTCL.

iii) All Acceptance tests shall be carried out at the manufacturer's works on every lot offered for inspection as per relevant IS in presence of representatives of MePTCL. In addition to above, all routine tests are also to be carried out on Potential Transformer as per relevant IS. Selection of samples for acceptance test as well as rejection and retesting shall be guided by relevant IS. The entire cost of acceptance and routine tests that are to be carried out as per relevant IS shall be treated as included in quoted price of Potential Transformer. Three (3) copies of test reports shall be submitted to the Chief MePTCL for approval and adequate extra copies for distribution to site.

iv) The contractor shall give at least 21 (twenty one) days advance notice intimating the actual date of inspection and details of all tests that are to be carried out.

14. TEST REPORTS AND TYPE TESTS :

Only type tested P.T. from the maker's list of MePTCL are to be offered conforming to our technical specification, and relevant IS and IEC. P.T. offered should be similar with ones on which type testing has been carried out as per relevant IS and IEC. Three sets of complete type test reports carried out in Govt. recognized Test House or Laboratory /NABL accreditated laboratory shall have to be submitted by successful bidder positively alongwith submission of drawings during detailed Engineering. Successful bidder may require to produce original copies type test reports at the time of detail Engineering if asked by MePTCL.

Each type test report shall comply the following information with test result

i) Compete identification , date and serial no .

ii) Relevant drawings as documented with test report.

iii) Method of application ,Where applied , duration and interpretation of each test

iv) The submitted type test report shall proof that the type test have been carried out within five years from the date of submission of bid.

SPECIFIC TECHNICAL PARAMETERS OF POTENTIAL TRANSFORMERS

SNO	DESCRIPTION	TECHNICAL PARAMETERS		
		220 KV	132 KV	33 KV
i)	Rated system voltage KV (rms)	220	132	33
ii)	Highest system voltage KV (rms)	245	145	36
iii)	System frequency (Hz)	50		
iv)	System neutral earthing	Effectively Earthed		-
v)	Installation	Outdoor		
vi)	Voltage variation	10%		
vii)	Voltage factor	1.5 times for 30 sec, 1.2 continuous		1.9 times for 8 Hrs, 1.2 continuous
viii)	Rated insulation level a) 1.2/50 microsecond impulse withstand outage KV (Peak) b) One min. dry power frequency withstand voltage KV (rms)	1050 460	650 275	170 70
ix)	Power frequency over voltage withstand requirements for secondary winding	3 KV		
x)	Creepage Distance (Heavily polluted atmosphere) Total (mm)	6125	3625	900
xi)	Accuracy	PTs shall be of accuracy class 0.2 for metering and 3P for protection as per IS:3156 / IEC 186		
xii)	Ratio a) Primary side (KV) b) Secondary Side (V) c) No of core	220/√ 3 110/√ 3 2	132/√ 3 110/√ 3 2	33/√ 3 110/√ 3 2
xiii)	Type of connector suitable for Pipe bus	3 inch/ACSR conductor	2.5 inch /ACSR conductor	1.5 inch/ACSR conductor/XLPE Cable.
xiv)	Partial discharge	Max. 10 (PC)	-	-
xv)	Class of insulation	-	A	-

Core Details of PT

Sl. No.	Description of Core	No. of Core	Core Details of Core I	Core Details of Core II & III
1	400000/√ 3 : 110 /√ 3, 110/√ 3, 110/√ 3	3	100 VA, 0.2	100 VA , 3P
2 a)	AIS:- 220000/√ 3 : 110 /√ 3, 110/√ 3, 110/√ 3	3	200 VA, 0.2	200 VA , 3P
b)	GIS:- 220000/√ 3 : 110 /√ 3, 110/√ 3, 110/√ 3	3	100 VA, 0.2	100 VA, 3P
3 a)	AIS:- 132000/√ 3 : 110 /√ 3, 110/√3, 110/√ 3	3	200 VA, 0.2	200 VA , 3P
b)	GIS:- 132000/√ 3 : 110 /√ 3, 110/√3	2	100 VA, 0.2	100 VA, 3P
4 a)	AIS:- 33000/√ 3 : 110 /√ 3, 110/√ 3	2	100 VA, 0.2	100 VA, 3P
b)	Indoor Switchgear:33000/√ 3 : 110 /√ 3, 110/√ 3	2	50 VA, 0.2	50 VA, 3P

CAPACITOR VOLTAGE TRANSFORMER

TECHNICAL SPECIFICATION FOR CAPACITOR VOLTAGE TRANSFORMER

1. *SCOPE :*

This section covers design, manufacture, assembly and testing at the manufacturer's works, supply, delivery at site of 420KV, 220KV & 132KV CVT complete with fittings and accessories. The CVTs shall supply voltage for metering, synchronizing and relaying services in 3-phase solidly grounded system and shall also be used for communication, teleprotection, telemetering and for line synchronization.

2. *STANDARDS :*

Capacitor Voltage Transformers and accessories covered by this specification shall comply with the requirements of the latest edition of the IS/IEC standards. In the event of the equipment confirm to any other internationally recognized standards which ensure better or equivalent quality are acceptable. Salient points of comparison shall be clearly brought out in the bid and a copy of the standard in English language shall be submitted.

3. *DEVIATION :*

Normally the offer should be as per Technical specification without any deviation. But any deviation proposed must be mentioned in the "Deviation Schedule" with reasons and advantage of such deviation. Deviations not mentioned in "Deviation Schedule" will not be considered afterwards. Such deviation may or may not be accepted.

4. *CONSTRUCTION :*

The features and constructional details of the capacitor voltage transformers shall be in accordance with the requirement stipulated hereunder:

a) Capacitor Voltage Transformers shall be complete in all respects and shall conform to the modern practice of design and manufacture.
b) Capacitor Voltage Transformers shall be outdoor type, single-phase, 50 Hz, housed in 220KV & 132KV class, oil filled, self-cooled shaded porcelain bushing suitable for operation under the service conditions as specified in general condition of service without protection from sun, rain and dust.
c) Capacitor Voltage Transformers shall be suitable for upright mounting on steel structures and shall preferably be suitable for horizontal transportation. The bidder shall also offer suitable steel pedestal/stand for CVTs and other outdoor equipment i.e Coupling devices etc and the stand should have a minimum height of 2500 mm.

d) The capacitor voltage transformers shall be complete with accessories like terminal connector for primary connection, weather proof terminal box for secondary connection, lifting lugs, grounding terminals, oil sight glass, filling and draining plugs and name plate.
e) The capacitor voltage transformers shall be filled up with insulating oil having characteristic as per latest IS:335 as specified. Capacitor Voltage Transformers shall be hermetically sealed to eliminate breathing and to prevent ingress of air and moisture into the capacitor stack and into the tank of Capacitor Voltage Transformer. The tank shall have a built-in-provision to dissipate any excessive internal pressure.
f) The capacitor voltage transformers shall consist of coupling capacitive dividers and electromagnetic units and shall be suitable for coupling the carrier equipment to the 220KV & 132KV overhead lines.
g) The coupling of Capacitor Voltage Transformers shall be suitable for the entire carrier frequency range of 40 KHz to 500 KHz. Necessary arrangement for preventing the HF signal to flow to the other circuits shall be provided.
h) The capacitor divider may consist of primary and secondary capacitance.
i) The capacitor voltage transformers shall have two secondary windings, one of which are intended for protection and the other one for metering.
j) Material for Primary and Secondary winding shall be of Copper.
k) The Capacitor voltage transformer secondary shall be protected by HRC cartridge type fuses for all the windings.
l) The HF terminal shall be kept earthed when not used for PLCC purpose. Earthing link with fastener to be provided for HF terminal.
m) Capacitor Voltage Transformers shall be suitable for high frequency (HF) coupling required for power line carrier communication.
n) Connection between coupling device and CVT shall be done by means of 6sq. mm copper wire taped with 11KV insulation

5. TEMPERATURE RISE :

- The maximum permissible temperature rise of the capacitor voltage transformer windings at 1.2 times rated primary voltage, rated frequency and rated burden corresponding to the highest rated output at any power factor between 0.8 and unity, over an ambient temperature of 50ºC shall not exceed the limits as specified in IEC standards.
- The temperature rise at 1.5 times rated primary voltage when supplied for 30 seconds starting at stable thermal conditions achieved by supplying 1.2 times the rates voltage continuously shall not exceed by more than 10ºC the values specified in the clause above.
- For any ambient temperature above the reference ambient temperature, the permissible temperature rise shall be reduced by an amount equal to excess ambient temperature.

6. BUSHING OF CVT:

a) The bushing shall have insulation, mechanical strength and rigidity for the condition under which then will be used at site and shall be designed to prevent accumulation of explosive gases and provide adequate oil circulation to remove internal heat.
b) There shall be no undue stressing of any part of the bushing due to temperature change and adequate means shall be provided to accommodate conductor expansion.
c) The bushing shall not cause any radio interferences when operated at rated system voltage.
d) All ferrous parts of the bushing including lifting hooks, cast metal end caps, bolts, nuts etc. used on the bushing shall be of high strength and hot dip galvanized as per IS:2633 as amended up to date.

e) Porcelain used, shall be homogenous, free from laminations, cavities and other flaws or imperfections that might affect the mechanical or dielectric quality and shall be thoroughly vitrified, tough and impervious to moisture.
f) The glazing of porcelain shall be of uniform brown or dark brown colour, free from blisters, burns and other similar defects and shall have smooth surface arranged to shed away rain water. The porcelain shall have ample insulation, mechanical strength and rigidity for the conditions under which they will be used.
g) The insulation of the porcelain shall be coordinated with that of the capacitor voltage transformers such that the flash over, if any, will occur only external to the voltage transformer.
h) The porcelain shell of the bushing shall be as per IS:5621 or IEC:815.
i) The porcelain shed shall be alternate long and short as per IEC:815.
j) Capacitor Voltage Transformers must withstand mechanical stresses resulting from wind pressure of 150Km per hour.

7. INSULATING OIL :

The quantity of insulating oil for filling complete unit shall be stated and the insulation oil shall comply in all respects with the provisions of the latest edition of IS:335 or IEC Publication 296 (as amended up-to-date).

8. TERMINAL CONNECTORS :

a) Capacitors Voltage Transformers shall be supplied with primary terminal connector suitable to connect twin Moose ACSR/approved drawings Conductor.
b) The terminal connectors should conform to the respective specification for clamps and connectors.

9. GROUNDING TERMINALS :

Two grounding terminals shall be provided on the diagonally opposite sides of the tank of each capacitor voltage transformer. The grounding conductor shall be MS flat of size 75 mm x 6 mm.

10. SECONDARY TERMINAL BOX :

i) All secondary terminals of the capacitor voltage transformers shall be brought out in a weather proof terminal box provided at one side of each voltage transformer for easy access. CVT sec. terminal box shall be made of sheet steel having minimum thickness of 3 mm. However, 2 mm. thickness having powder coated painting is acceptable.
ii) The terminal box shall be hot-dip galvanized/painted.
iii) The terminal box shall be provided with a removable cable gland plate at the bottom for mounting three cable glands suitable for 1100V grade, steel wire armoured, PVC sheathed 4 x 2.5 sq. mm. stranded copper conductor cables. The cable glands shall be included within the scope of supply and shall be screw on type and made of brass.

iv) The terminal box shall be provided with a door on the front so as to permit easy access to secondary terminals. The door shall be provided with locking arrangement to prevent ingress of moisture and water into the terminal box.
v) The terminal box shall be provided with a terminal board. The terminals shall be so staggered that connection of external cable to any terminal block should be possible without disturbing the rest of the connections. The terminal block arrangements shall be such as to provide maximum accessibility to all conductor terminations.
vi) The terminal blocks shall be fully enclosed and made of moulded, non-inflammable plastic material and barriers moulded integrally.
vii) Terminal block arrangements shall be such that it will be possible to connect or disconnect terminals on live circuits.
viii) All terminals shall be clearly marked with identification number to facilitate connection to external wiring.
ix) One secondary terminal other than three winding shall be connected through impedance to avoid ferroresonance.
x) A protective surge arrester shall be provided to prevent breakdown of insulation by incoming surges and to limit abnormal rise of terminal voltage of shunt capacitor/primary winding, tuning reactor/RF choke etc. due to short circuit in transformer secondaries. In case of an alternate arrangement, bidder shall bring out details in the bid.

11. NAME PLATE :

Capacitor Voltage Transformers shall be provided with name plate. Name plate shall conform to the requirements of the relevant IEC incorporating the year of manufacture.

12. PAINTING :

i) The tank shall either be hot dip galvanized or painted. All steel surfaces shall be cleaned by sand blasting or chemical process as required to produce a smooth surface, free of scale, grease and dirt. Steel surfaces in contact with insulating oil shall be painted with heat resistant oil insoluble insulating varnish.
ii) External surfaces shall be given a coat of high quality red or yellow chromate primer and finished with two coats of synthetic enamel paints (Light gray as per shade 631 of IS:5).
iii) Paints shall be carefully selected to withstand tropical heat, rain etc. The paints shall not scale off a crinkle or be removed by abrasion due to normal handling.

13. CONTRACT DRAWING AND MANUALS :

After placement of Purchase Order or Letter of Award (LOA) the contractor shall submit six (6) copies of drawing/catalogue to the Chief Engineer, Tr. Project, Vidyut Bhavan, 10th floor, Salt Lake, Kolkata – 91 for approval.

i) Outline general arrangement dimensional drawing of Capacitor Voltage Transformer furnishing front and side elevations, top and bottom plan views, cross sectional view, all accessories and external feature, mounting arrangement on steel structure, spacing and size of the mounting bolts, total and protective creepage distance of the bushing, internal circuit diagram with polarity marks, terminal arrangement for secondary terminal box, size of primary terminals, grounding

terminals and lifting lugs, quantity of insulating oil, net and shipping weights, shipping dimensions etc.

ii) Name and rating plate diagram of the Capacitor Voltage Transformers.
iii) Foundation and anchor details including dead load and impact load with direction and point of application and also location of Centre of Gravity of CVT.
iv) Technical catalogue, operation and maintenance manual.
v) Any other drawings found necessary in addition to those stated above.
vi) Ten(10) sets of approved drawings and ten(10) copies of erection, operation and maintenance manual for the capacitor voltage transformers in English language shall be submitted for each substation for our record and distribution to site. The manual shall contain the following :
   a) A brief description of Capacitor Voltage Transformers furnishing the constructional features.
   b) Operation and maintenance of Capacitor Voltage Transformers.
   c) Outline general arrangement drawing of Capacitor Voltage Transformers furnishing all the components and accessories.
   d) Marked erection prints identifying the component parts of Capacitor Voltage Transformers.
   e) Detailed dimensions, assembly and description of all the accessories.
   f) Diagram plate, internal circuit diagram of the component parts of the CVT's and terminal arrangement of the secondary terminal box.
   g) Any other information found necessary in addition to those stated above.
   h) In all drawings reference of L.O.A. No. shall be mentioned.

14. TEST AT FACTORY AND TEST CERTIFICATES:

The following acceptance test shall be carried out on every lot of Capacitor Voltage Transformers offered for inspection as per latest edition of IS:3156 (Part I to IV) and IEC:358. The entire cost of acceptance and routine test that are to be carried out as per relevant IS & IEC shall be treated as included in quoted price of CVT. Six copies of test reports shall be submitted to the Chief Engineer, Tr. Project, Bidyut Bhavan, 10th floor, Salt Lake, Kolkata-700091 for approval and adequate extra copies for distribution at site. The contractor shall give at least 21 (twenty-one) days notice in advance of the date when the test will be carried out. Six(6) copies of routine test results of capacitor voltage transformer shall be submitted to the Chief Engineer, Engineering, for approval.

i) Verification of terminal markings and polarity as per clause 15 of IEC:186 as amended up to date.
ii) Power frequency test on the primary winding as per clause 16 of IEC:186 as amended up to date.
iii) Power frequency test on the secondary winding as per relevant clause of IEC:186 as amended up to date.
iv) Determination of error according to the requirement of the appropriate accuracy class as per clause 26 and 36 of IEC:186 as amended up to date.
v) Capacitance and loss angle measurement before and after voltage test as per clause 7 and 8 of IEC:358 as amended up to date.
vi) Partial discharge test on capacitor dividers as per clause 13.1 of IEC:358 as amended up to date.
vii) Sealing test as per clause 15 of IEC:358 as amended up to date.

Any other acceptance test not mentioned above but required as per relevant IS & IEC shall also be carried out. Selection of samples for acceptance test as well as rejection and retesting shall be guided by relevant IS & IEC.

15. ERECTION AND MAINTENANCE TOOLS:

Special tools and equipment, if any, required for installation and maintenance of Capacitor Voltage Transformers shall be supplied by the Contractor with the Capacitor Voltage Transformers without any extra cost. Quantity of special tools and tackles to be supplied will be decided by the purchaser from the list given by them with the bid.

16. TEST REPORTS AND TYPE TESTS:

Only type tested CVT from the maker's list of WBSETCL are to be offered for all voltage classes CVT conforming to our technical specification and relevant IS & IEC. CVT offered should be identical with ones on which type testing has been carried out as per relevant IS & IEC. Three sets of complete type test reports carried out in Govt. recognized Test House or Laboratory/NABL accreditated laboratory shall have to be submitted. Successful bidder may require to produce original copies of the type test reports at the time of detail Engineering if asked by WBSETCL.

Each type test report shall comply the following information with test result.

i) Complete identification, date and serial no.
ii) Method of application, where applied, duration and interpretation of each test.
iii) Relevant drawings as documented with test report.

17. GUARANTEE:

Electrical characteristics shall be guaranteed by the bidder. In case of failure of materials to meet the guarantee, WBSETCL shall have right to reject the material. Guaranteed Technical Particulars are to be submitted by successful bidder during detailed engineering along with submitted drawings/documents. However, format for submission of GTP shall be handed over to intending bidders at the time of sale of tender documents.

CORE DETAILS

Sl. No.	Description of Core	Number of Core	Core I	Core II & III
1	400000/√ 3 : 110 /√ 3, 110/√ 3, 110/√ 3	3	100 VA, 0.2	200 VA , 3P
2	220000/√ 3 : 110 /√ 3, 110/√ 3, 110/√ 3	3	50VA, 0.2	50VA , 3P
3 a)	AIS:- 132000/√ 3 : 110 /√ 3, 110/√3, 110/√ 3	3	50VA, 0.2	50VA , 3P
b)	GIS:- 132000/√ 3 : 110 /√ 3, 110/√3, 110/√ 3	2	50VA, 0.2	50VA, 3P
4 a)	AIS:- 33000/√ 3 : 110 /√ 3, 110/√ 3	2	100 VA, 0.2	100 VA, 3P
b)	Indoor Switchgear: 33000/√ 3 : 110 /√ 3, 110/√ 3	2	50 VA, 0.2	50 VA, 3P

Note : The accuracy of 0.2 on winding I should be maintained up to and including the total simultaneous burden of 100VA together.

SPECIFIC TECHNICAL PARAMETERS

The capacitor voltage transformers shall be suitable for carrier coupling.

			420KV	220KV	132KV
a)	Highest system voltage KV (rms)	:	420	245	145
b)	Rated system voltage KV (rms)	:	400	220	132
c)	Rated frequency HZ	:	50	50	50
d)	System fault level KA (rms)	:	50	40	31.5
e)	System neutral earthing	:	Effectively earthed	Effectively earthed	Effectively earthed
f)	Installation	:	Outdoor	Outdoor	Outdoor
g)	Service condition	:	As per general condition of service	As per general condition of service	As per general condition of service
h)	Limits of Temperature rise (immersed in oil)	:	55°C	55°C	55°C
i)	Voltage factor	:	1.5 for 30 Sec. 1.2 continuous	1.5 for 30 Sec 1.2 continuous.	1.5 for 30 Sec. 1.2 continuous
j)	Rated insulation level : 4.1.1 1.2/50 microsecond impulse withstand voltage KV (peak). 4.1.2 One minute Dry & Wet power frequency withstand voltage KV (rms)	: :	1425 630	1050 460	650 275
k)	Total capacitance (picofarad)	:	4400 + 10% - 5%		
l)	a) High frequency capacitance for the entire carrier frequency range. b) Equivalent series resistance over the entire carrier frequency range (Ohms)	: :	Within 80% to 150% of rated capacitance Less than 40		
m)	Stray capacitance (Pico farads) & stray conductance (micro Siemens) of the low voltage terminal of a complete CVT including Electro Magnetic Unit over the entire carrier frequency range.	: :	520 (max) 50		
n)	One minute power frequency test : a) Withstand voltage between HF (low voltage) terminal of intermediate transformer & earth terminal, KV (rms). b) Withstand voltage for secondary windings & earth terminal, KV (rms). c) Withstand voltage between HF(LV) carrier coupling terminal & earth terminal, KV(rms)	: : :	4 3 10		
o)	Creepage distance Total (mm)	:	10500	6125	3625
p)	Partial discharge level, Pico coulombs	:	10	10	10
q)	Suitable for carrier coupling	:	Yes	Yes	Yes

LIGHTNING ARRESTOR

TECHNICAL SPECIFICATION FOR LIGHTNING ARRESTORS

1. SCOPE :

a) This Specification covers design, manufacture, testing at manufacturer's Works of all classes of gapless Lightning Arrestors complete with fittings and accessories.

b) These arrestors shall be of heavy duty, station class and gapless zinc Oxide type.

c) Arrestors shall be hermetically sealed units suitable for outdoor installation on self-supporting base or structures to be supplied by the bidder.

2. STANDARD :

Arrestors shall conform in general to IEC-99-4 document or its latest amendment and IS/IEC as follows:

i) IEC-99-4	:	Gapless Lightning Arrestor
ii) IS 3070 P-III	:	Metal Oxide Surge Arrestors without gaps for AC Systems.
iii) IEC 99 P-III	:	Artificial Pollution Testing of Lightning Arrestor
iv) IEC 270	:	Partial Discharge Measurement.
v) IS 2071	:	Methods of H V Testing
vi) IS 6209	:	Methods for Partial Discharge Measurement
vii) IS 5621	:	Hollow Insulators for use in electrical equipments

3. I) DEVIATION :

Normally the offer should be as per Technical Specification without any deviation.

II) MODIFICATION :

If any modification felt necessary to improve performance, efficiency and utility of equipment, the same must be mentioned in the 'Modification schedule' with reasons duly supported by documentary evidences and advantages. Such modifications suggested may or may not be accepted, but the same must be submitted along with Pre-Bid Queries. The modifications not mentioned in Schedule will not be considered.

4. DUTY REQUIREMENT :

The Surge Arrestors are being provided to protect the following equipment whose insulation levels are indicated in the table given below :

Equipment to be protected	Switching surge (KVp) for 420KV System	L1 for 420KV System (KVp)	L I for 245 KV system (KVp)	L I for 145 KV system (KVp)	L I for 36 KV system (KVp)
Power Transformer	± 1050	± 1300	± 950	±550	±170
Instrument Transformer	± 1050	± 1425	± 1050	±650	±170
Circuit Breaker	± 1050	± 1425	± 1050	±650	±170
Isolator Phase to ground	± 1050	± 1425	± 1050	±650	±170
Isolator Across open poles	± 900 (-/+ 345)	± 1425 (-/+ 240)	±1200	±750	±195
Reactor	± 1050	± 1300	-	-	-
XLPE cable	± 1050	± 1425	± 1050	±650	±170

a) The Lightning Arrestors shall be capable of discharging Lightning and switching surges and temporary power frequency over voltages .The Surge Arrestor shall be capable of discharging over voltages occurring during switching of unloaded transformers, Reactors and long lines.

b) The Arrestors shall be capable of withstanding Maximum Continuous Operating Voltages (M.C.O.V).

c) The Arrestors supplied shall be suitable for heavily polluted atmosphere.

d) The reference current of the Arrestors shall be high enough to eliminate the influence of grading and stray capacitance on the measured reference voltages.

e) The Surge Arrestor shall be suitable for duty cycle of circuit breaker in this system.

5. FITTINGS & ACCESSORIES :

a) Arrestors of rating 120 KV and above shall be complete with insulating base for connection to surge counter having provision for bolting to flat surface of structure. Arrestor rating of 42 KV shall be directly mounted on structure as there is no surge counter.

b) For arrestors of rating 120 KV and above, self-contained discharge counters suitably enclosed for outdoor use shall be provided for each single pole unit and placed on the Arrestor Structure, but requiring no auxiliary or battery supply for operation. The Cyclometer counter reading shall clearly visible through an inspection window. The counter terminals shall be robust and of adequate size and shall be so located that incoming and outgoing connections can be made with minimum no. of bends. The inspection window shall be sealed instead of screwed to prevent ingress of moisture.

c) Suitable leakage current monitor on each pole of the arrestors with appropriate connections shall be supplied to measure leakage currents, for monitoring of 120 KV and above class of arrestor. The reading of Milliammeter and counters shall be visible through an inspection glass panel.

d) Grading ring/Corona ring shall be provided for Arrester rating of 120KV & above arrester for achieving linear voltage distribution along the Arrester column. Material of Grading ring/Corona ring shall be of Al or better quality material.

e) Each single pole arrestor shall be provided with suitable name plate, at the base with the following data:

i) Name of device
ii) Manufacturer's name and trade mark, type and identification
iii) Year of manufacture
iv) Voltage rating & frequency rating.
v) Nominal discharge current
vi) MCOV (Maximum Continuous Operating Voltage in KV) .
vii) Discharge class.
viii) Energy Discharge capability (KJ/KV rating)
ix) Purchase Order reference.
x) Applicable Standard.
xi) Pressure Relief current in KA rms (for arrestors fitted with Pressure Relief device)
xii) Serial Number

f) Required connectors and fixtures for L.A. leakage current monitor and discharge counter shall be supplied along with the L.As.

g) Terminal connector shall be suitable for either ACSR Moose (single moose or double moose as per requirement) / ACSR Panther conductor for 400KV, 220 KV, 132 KV and 33 KV system voltage class L.A. having universal take off. Detailed particulars of Clamps and Connectors shall be guided by the specification for Clamps and Connector in this bid document.

h) Two ground terminal suitable for G.I flat of required sizes shall be provided on diagonally opposite sides.

i) Necessary hardware such as nuts, bolts, spring washers, etc. shall be supplied for different units.

j) Surge monitor consisting of discharge counter and milliammeters should be suitable to be mounted on Support Structure of the arrester and should be tested for IP:55 degree of protection. Surge Monitors shall be connected in series with Surge Arrestor at a height approx. 1.5 meter from ground level. The cable used for connecting Surge Arrestor to Surge Monitor and ground is to be insulated from the structure by insulated cable.

6. CONSTRUCTIONAL FEATURES :

a) The arrestor elements shall be designed in such a way as to obtain robust construction with excellent mechanical and electrical properties even after repeated operation. The lightning arrestors should be adequately designed to operate satisfactorily under temporary power frequency over voltage as given in Specific Technical Parameters, after discharging two shots of respective long duration surges. Uniform density of zinc oxide element shall be maintained to provide uniform current distribution.

b) The lightning Arrestors shall be of adequate Pressure Relief Class as per IEC-99-4 , fitted with Pressure Relief Devices and Arc diverting ports to minimise possibilities of shattering of porcelain housing and providing path for flow of rated fault currents in the event of arrestor failure.

c) Sufficient creepage distance shall be provided to reduce excessive uneven voltages over the porcelain due to contamination, for which the arrestor shall not fail.

d) Seals shall be provided in such a way that these are always effectively maintained even when discharging the maximum rated lightning current.

e) Housing Insulators shall be of porcelain, glazed and completely vitrified and free from blow holes, micro-cracks or voids .Porcelain housing shall be so coordinated that external flashover will not occur due to application of any impulse or switching surge voltage up to the maximum design value for the arrestor.

f) The end fittings shall be made of non-magnetic and corrosion proof material. LAs shall be hermetically sealed. Arrestors shall be suitable for mounting on a support structure.

g) There shall be minimum number of arrestor units for lightning arrestors of 120 KV rating and above. For 42KV and below single arrestor unit is preferred.

7. APPLICATION :

The lightning Arrestors are used for protection of incoming and outgoing line and also of the power transformers from lightning surge as well as from power frequency over voltage.

8. GROUNDING TERMINALS :

Two grounding terminals on diagonally opposite sides of adequate size suitable for connecting G.S. Flat of 50×10mm shall be provided for all voltage classes.

9. GUARANTEE:

Electrical characteristics shall be guaranteed by the bidder. In case of failure of materials to meet the guarantee, MePTCL shall have right to reject the material. Guaranteed Technical Particulars are to be submitted by successful bidder during detailed engineering alongwith submitted drawings/documents. However format for submission of GTP shall be handed over to intending bidders at the time of sale of tender documents.

10. CONTRACT DRAWINGS AND MANUALS :

A. In the event of placement of L.O.A., six (6) copies of drawings and descriptive literatures shall be furnished for approval :

a) General Outline drawing showing plan, elevation and end views with dimensions & full mounting details with weights.

b) Dimensional Drawing showing the Arrestor mounted on its base and where applicable with surge counter and leakage current measuring meter.

c) Details of Bushing top terminals.

d) Shipping dimension with weights.

e) Position of Centre of gravity and clearances with adjacent grounded metallic structures.

f) Diagram plate showing electrical connections of the surge counter and leakage current measuring meter where applicable.

g) Diagram plate showing electrical connections of the surge counter and leakage current measuring meter where applicable.

h) Rating Plate.

i) Complete foundation drawings for the structure of Lightning arrestor, where applicable.

B. Four (4) sets of approved drawings and operation and maintenance manuals both in hard and soft copy shall be submitted for our record and distribution to site.

11. TEST AT FACTORY AND TEST CERTIFICATES :

a) Each LA. shall comply with the requirements of routine test as specified in the relevant IEC:99-4 & IS:3070 (Part - III).

b) All Routine test at manufacturer's works shall be carried out for all LA's and Test reports are to be submitted.

c) All acceptance tests shall be carried out at the manufacturer's works on every lot offered for inspection as per relevant IEC & IS in presence of representative of MePTCL. Selection of samples for acceptance test as well as rejection and retesting shall be guided by relevant IEC & IS. The entire cost of acceptance and routine tests that are to be carried out as per relevant IEC & IS shall be treated as included in quoted price of LA. Three (3) copies of test reports shall be submitted for approval and adequate extra copies for distribution to site.

d) The contractor shall give at least 15 (fifteen) days' advance notice intimating the actual date of inspection and details of all tests that are to be carried out.

12. TEST REPORTS AND TYPE TESTS :

Only type tested L.A's are to be offered for 400KV, 220KV, 132KV & 33KV System Voltage conforming to our technical specification and relevant IS and IEC. L.A offered should be similar with ones on which type testing has been carried out as per relevant IS and IEC. Three sets of complete type test reports carried out in Govt. recognized Test House or Laboratory /NABL accredited laboratory shall have to be submitted by successful bidder positively alongwith submission of drawings during detailed Engineering. Successful bidder may require to produce original copies type test reports at the time of detail Engineering if asked by MePTCL.

Each type test report shall comply the following information with test result

i) Complete identification, date and serial no.

ii) Relevant drawings as documented with test report.

iii) Method of application, where applied, duration and interpretation of each test.

SPECIFIC TECHNICAL PARAMETERS

SNO	DESCRIPTION	TECHNICAL PARAMETERS			
	TYPE OF ARRESTOR	STATION CLASS HEAVY DUTY GAPLESS			
i)	Nominal system voltage (KV)	400	220	132	33
ii)	Highest system voltage (KV)	420	245	145	36
iii)	System Neutral Earthing	EE	EE	EE	Earth with Earthing Transformer
iv)	BIL of transformers (KVp)	1300	900	550	170
v)	System fault level (KA) for 3 sec.	50 for 1 sec.	40 For 3 sec.	31.5 For 3 sec.	25 For 3 sec.
vi)	Lightning Impulse withstand voltage for arrestor housing (KVp)	1425	1050	650	170
i)	Rated Voltage (KV)	360or as specified in the schedule	198	120	42
ii)	Maxm. Continuous operating voltage (KVrms)	306	168	102	36
iii)	Nominal Discharge Current (KAp) of 8/20 micro second wave	10/ 20	10	10	10
iv)	Line discharge class	3	3	3	2
v)	Minimum Energy Discharge capability (KJ/KV) at rated voltage.	10	7.5	7.5	5
vi)	Temporary over voltage withstand capability (KVrms) for 10.0 secs	360 or as specified in the schedule	198	120	42
vii)	Insulation Housing withstand voltages i) Lightning Impulse(Dry) ii) Power frequency(wet) for 10 KA for 5 KA	As per IEC 60099-4			
viii)	Minimum creepage Distance (mm)	10500	6125	3625	900
ix)	Pressure Relief Class	← A →			
x)	(Minimum) High Current Impulse withstand (4/10 micro second wave) KA (peak)	100	100	100	100
xi)	Maxm. Lightning Impulse(8/20 micro-second Wave) residual voltage (KVp) 5KA 10KA	800 850	517 550	320 340	112 120
xii)	Maxm. switching surge(30/60 micro-second wave) protective level (KVp)				

	500 Amps 1000 Amps 2000 Amps	- - 750	- 45 5 -	- 280 -	98 - -
xiii)	Maxm. Steep Impulse(1/20 MS impulse) residual voltage at 10 KA (KVp)	1050	600	372	130
xiv)	Partial Discharge(pico-coulomb) when energized at 1.05 times its continuous operating voltage.	Not exceeding 10 PC			
xv)	Rated Frequency (Hz)	50			
xvi)	Minm. visible corona discharge voltage (KVrms)	320	-	-	-
xvii)	Min. Bending load (kgm)	1000	1000	500	500
xviii)	1 min. p.f. withstand (KVrms) voltage (dry & wet) for arrestor housing	630	460	275	70
xix)	Switching Impulse withstand voltage (250/2500 micro second) dry & wet for arrestor housing (KVp)	±1050	-	-	-
xx)	Pressure relief Current i) High Current (KA rms)	40	40	40	40

ISOLATOR

TECHNICAL SPECIFICATION FOR ISOLATOR

1. SCOPE

This specification covers design, manufacture, testing at manufacturer works, supply, delivery of the following type of Isolators:

i) 420KV & 245KV Pantograph type isolator with or without earth switch. The main isolator shall be of individual pole operation with provision of electrical motor in each pole.

ii) 420KV, 3150A / 2000A, Horizontal centre break (HCB) type isolator with or without earth switch. The isolator shall be motor operated, having individual motor for each pole.

iii) 245 KV, 2000A / 1600A, Horizontal Centre Break (HCB), 3 pole gang / single pole (in staggered formation) motor operated isolator with or without earth switch. Where isolators are connected in staggered formation, provision of motor shall be at each pole, for individual pole operation.

iv) 145 KV, 2000 / 1250A Horizontal Centre Break (HCB), 3 pole gang / single pole (in staggered formation) motor operated isolator with or without earth switch. Where isolators are connected in staggered formation, provision of motor shall be at each pole, for individual pole operation.

v) 145KV, 2000 / 1250A Horizontal Centre rotating Double Break (HCDB), 3 pole gang, and motor operated isolator with or without earth switch.

vi) 36KV, 1600A Horizontal Centre Rotating Double Break 3 Phase gang operated High Level isolator. This isolator shall be without Earth switch.

vii) 36 KV, 1250 A Horizontal Centre Rotating Double Break type 3-phase gang operated type isolator. The isolator shall be provided with or without single earth switch. This earth switch shall be gang operated mechanically by hand.

These isolators shall be complete with provision for electrical/mechanical interlock, with insulators, auxiliary contact switches, position indicating device, base frames, linkages operating mechanism, control cabinet, arcing horns (wherever necessary) etc. and other devices whether specifically called for herein or not.

2. STANDARD :

Disconnecting switches (isolators) covered by this specification shall conform to latest edition of IS:9921 (Part I to Part V) & IEC-129. Porcelain post insulators for the isolators shall conform to IS-2544 and/or IEC:168 as amended up to date except to the extent explicitly modified in this specification. Porcelain post insulators of isolator shall be guided by relevant technical specification of post insulator.

3. I) DEVIATION :

Normally the offer should be as per Technical Specification without any deviation.

II) MODIFICATION :

If any modification felt necessary to improve performance, efficiency and utility of equipment, the same must be mentioned in the 'Modification schedule' with reasons duly supported by documentary evidences and advantages. Such modifications suggested may or may not be accepted, but the same must be submitted along with Pre-Bid Queries. The modifications not mentioned in Schedule will not be considered.

4. GENERAL INFORMATION :

4.1. The disconnecting switches (isolators) shall be installed in the Sub-station at an altitude not exceeding 1000 metres above mean sea level.

4.2. Any material or accessories which may not have been specifically mentioned but which is usual and necessary for satisfactory and trouble free operation and maintenance of the equipment shall be within the scope of supply without any extra financial implication.

4.3. Isolators shall be outdoor and off-load type. Earth switch shall be provided on isolator whenever called for.

4.4. The isolator shall be designed for use in geographic and meteorological conditions as given in 'General Technical Specification' chapter.

5. DESIGN CRITERIA :

5.1. The moving contact of pantograph isolator shall move vertically and the fixed contact shall be suspended from strung bus. The operating mechanism shall be motor operated. The pantograph isolator shall be single pole type supported by solid core insulator column with provision of closing / opening locally by mechanical and electrical operation as well as electrical three phase gang operation from the remote control panel/control desk.

5.2. 420KV individual pole operated (having individual motor in each pole) horizontal centre break (HCB) type isolator shall be single phase two column with moving contacts. This isolator shall be suitable for closing/opening locally by manually as well as electrically and also electrical operation from remote control panel. This isolator shall be provided with earth switch on both sides. All the necessary accessories for fulfillment of pole discrepancy scheme for main isolator shall be within the scope of the contractor.

5.3. 245 KV & 145 KV Horizontal centre break type isolator and 145KV Horizontal Centre rotating Double Break type isolator shall be gang operated through motor from local as well as from remote control panel. There should be provision for mechanical operation by hand of isolator locally. Earth Switch shall be provided on the line side of the isolator and shall be gang operated mechanically by hand.

5.4. 245/145KV staggered Isolator shall be single centre break with provision of motor of each pole for individual operation. Operating mechanism shall be operated from local as well as from remote control panel with master follower scheme to ensure simultaneous operations for all those poles. There shall be provision for local manual operation also.

5.5. All 36 KV isolators shall be horizontal centre rotating double break type 3-phase gang operated mechanically by hand. Earth switch shall be provided on line side of isolator and the same shall also be mechanically gang operated by hand.

5.6. For three phase Isolators with motor control operation, the supply of interconnecting cables are under the scope of contractor.

5.7. The moving contacts of 3-phase centre break type isolator shall rotate from their fully closed position to fully open position. The break shall be distinct and clearly visible from ground.

5.8. The line side horizontal type isolator for 245/145 KV shall be provided with arcing horn and guiding horn. Other horizontal type isolators shall have guiding horn only.

5.9. Earth switch wherever provided shall be constructional interlocked as well as electrically interlocked so that earth switch can be operated only when the main isolator is open and vice-versa.

5.10. The isolator and earth switch of all voltage class have interlocking coil and operation can be performed when the interlocking coils are energised. There shall be arrangement for defeating the interlock by hand operated lever when the interlocking coil is defective. The individual interlocking coils shall be suitable for operation from 220 ± 10% Volt DC supply.

5.11. Arcing horn/guiding horn/Corona control ring shall be provided in all isolator of 420KV Class HCB type/pantograph type and line side HCB isolator of 245 and 145KV isolator.

5.12. The isolator and circuit Breaker interlocking shall be provided as per scheme to be approved during detailed engineering.

6. DUTY REQUIREMENT :

6.1. Isolator and earth switches shall be capable of withstanding the dynamic and thermal effect of maximum short circuit current of the system in their closed position. They shall be constructed such that they do not open under influence of short circuit current.

6.2. Earth switch can be capable of discharging trapped charges of the respective lines.

6.3. Isolator shall be capable of making/breaking normal current with no significant change in voltage occurs across the terminal of each pole of isolator on account of make / break operation.

6.4. The isolators shall be capable of making/breaking magnetising current of 0.7A at 0.15 power factor and capacitive current of 0.7A at 0.15 power factor at rated voltage.

6.5. The earth switch wherever provided shall be constructionally inter-locked so that earth switch can be operated only when the isolator is in open condition or vice versa. The constructional interlock shall be built in construction of isolator and shall be in addition to the electrical and mechanical interlocks provided in operating mechanism.

6.6. In addition to constructional interlock, isolator and earth switch shall have provision to prevent their electrical and manual operation unless the associated and other interlocking conditions are met. Suitable individual interlocking coil arrangements shall be provided. The interlocking coil shall be suitable for continuous operation from DC supply and within a variation range as stipulated in 'Specific Technical Parameter'.

7. MAIN CONTACTS (MALE AND FEMALE):

7.1. The isolators with or without earthing switches shall have heavy duty self-aligning and self–cleaning type high pressure contacts. The contacts shall be made of hard drawn electrolytic copper. The high pressure type contacts shall wipe the contact surface during opening and closing without causing any scouring or abrasion on the contact surface.

7.2. The contacts and other current carrying parts shall be so designed that their temperature rise under different operating conditions shall not exceed the value specified in IS:9921. Temporary rise of temperature due to passage of specified rated short circuit current for all voltage classes shall not cause any annealing or welding of contact surfaces.

7.3. All current carrying parts including Earth Switch should be of Electrolytic Copper of current density 1.75 Ampere per sq. mm (Max.). In case of Pantograph isolator, moving arms for isolator may be of Aluminium. For all aluminium parts, current density should be 0.75 ampere per sq. mm (Max.).

7.4. The female contacts of the horizontal type isolators shall consist of properly tempered loops of copper strip suitable for rated and short time current rating of the respective voltage class. The hard drawn electrolytic copper strips shall be silver plated of minimum 20 micron thickness and shall be fixed with powerful phosphor bronze or stainless steel spring of required number.

7.5. The male arm and female arm of the horizontal centre break isolator (conventional as well as staggered type) of all voltage classes shall be made from tube of high conductivity hard drawn electrolytic copper of required size and thickness.

7.6. The type of main contacts for pantograph isolator shall be Tong type (vertical Reach type). The line contact of moving arm of the isolator shall be silver plated hand drawn electrolytic copper. The thickness of silver plating shall be 20 micron minimum. The fixed contact, suspended from the high level bus shall of hard down electrolytic cu tube with silver plating of minimum 20 micron.

8. INSULATORS :

8.1. The insulators to be used shall conform to IS:2544 and/or IEC-168 and shall be solid core type and shall be homogeneous; free from cavities, tough and impervious to moisture.

8.2. Glazing of porcelain shall be uniform brown colour free from blister, burns and other defects which may affect the mechanical and dielectric quality of the insulators.

8.3. All iron parts shall be hot dip galvanised. The joints shall be so designed that any thermal expansion of the metal and the porcelain parts shall not be loosened during the whole range of operation.

8.4. Puncture voltage of Insulator shall be greater than dry flashover voltage of respective Isolators.

8.5. The design of the isolator shall be such that pressure due to the contact shall not be transferred to the Insulators after the main blades are fully closed.

8.6. The cantilever strength (min) of solid core support insulator shall be as specified under 'specific technical particulars'.

8.7 In addition to solid core support insulator, operating rod insulator shall also be provided for

420KV pantograph type isolator. This shall conform to IEC:168-94 and IEC:273-90. The offered operating rod insulator matching with pantograph isolator shall be type tested one.

9. BASE OF THE ISOLATOR :

Each isolator shall be provided with a complete galvanised steel base with holes and designed to mount on a supporting structure, which shall be rigid, and self supporting.

10. TERMINAL CONNECTORS :

10.1. Terminal connectors shall be suitable for carrying rated current continuously and also the rated short time current without exceeding temperature specified for the main blades. One end rigid and other end flexible type connectors shall be used.

10.2. The terminals of disconnecting switches (isolators) shall be provided with bimetallic terminal connectors suitable for connection to Aluminium pipe / ACSR Conductor of different sizes as per requirement of different voltage classes and relevant approved drawings. Detailed particulars have been indicated in the specification for Clamps and connector in this bid document.

11. AUXILIARY SWITCHES :

11.1. All isolator and earthing switches shall be provided with auxiliary switches suitable for 220±10% V DC and continuous current carrying capacity of 10 Amps.

11.2. The contacts of the auxiliary switches shall be used for remote indication of open or close position in the control panel as well as for electrical interlock with other equipments. These contacts shall be housed in a suitable weatherproof cabinet for outdoor use to make it free from dust and prevent ingress of moisture during rain. Degree of protection of the cabinet IP-55 as per IS- 13947.

11.3. The number of auxiliary switches shall be determined as per requirement. An indicative number has been specified under specific technical parameters. Make before break and break after break auxiliary switches shall be provided for bus bar differential protection.

12. EARTH SWITCH :

12.1. The Earthing switch shall include the complete operating mechanism and auxiliary contacts.

12.2. For 400KV isolator Earth switch there shall have provision for both manual operations by hand as well as local electrical operation having electrical motor. Under any circumstances remote electrical operation of 400KV earth switch shall not be possible. All necessary precautions through interlocking or any other suitable means shall be provided in the 400KV earth switch operating mechanism box of that particular isolator in order to arrest remote electrical operation of earth switch. The operating handle shall be such that it can easily be operated from standing height from ground. There shall be interlock between contacts of main blades

and earth switches so that at one time either main blade or earth switch can be made ON. Individual pole operated 400KV main Isolators shall have individual pole operated earth switch having motors for individual pole.

12.3 The earth switch of 220KV, 132KV and 33KV system shall be manually operated by hand. The operating handle shall be such that it can easily be operated from standing height from ground. There shall be interlock between contacts of main blades and earth switches so that at one time either main blade or earth switch can be made ON. The earthswitches shall be able to carry the same fault current as the main blades of the isolators and shall withstand dynamic stresses.

12.3. The earthing terminal of earth switch shall be able to carry the rated short time current rating for three seconds.

12.4. Earth switch shall be provided with flexible copper braids for connection to earth terminal. These braids shall have the same short time current capacity as the earth blade.

12.5. The frame of each isolator and earthing switch shall be provided with two reliable earth terminals for connection to the earthmat.

12.6. Isolator design shall be such that earthing switch position can be inter change to either side of the structure as per requirement at site.

12.7. The 36KV isolator design should be such as to permit fixing of earth switches in future as per requirement of MePTCL.

12.8. Suitable mechanical arrangement shall be provided for de-linking electrical drive for mechanical operation.

12.10 The plane of movement and final position of the earth blades shall be such that adequate electrical clearance are obtained from adjacent live parts in the course of its movement between ON and OFF position.

13. OPERATING MECHANISM :

13.1. The operating mechanism shall be motor operated as well as manually operated for 420KV, 245 KV and 145 KV Class isolator and shall ensure quick and effective operation. 36 KV isolators shall be manually operated. The operating mechanism shall be housed in a weather proof outdoor mechanism box near the base of the isolator.

13.2. Each isolator/pole of isolator and earth switch shall be provided with a manual operating handle at a height of 1000 mm. (approx.) from the base of isolator support structure so that one man can open or close the isolator with ease in one movement while standing at ground level.

13.3. All operating linkages carrying mechanical loads shall be designed for negligible deflection. The isolator and earth switches shall be provided with 'Over Center' device in the operating mechanism to prevent accidental opening due to wind, vibration, short circuit forces or movement of the support structures.

13.4. All rotating parts shall be provided with grease packed roller or ball bearings in sealed housings designed to prevent ingress of moisture, dirt or other foreign material. Bearing pressure shall be kept low to ensure long life and ease of operation. Locking pins whenever used shall be rustproof.

13.5. Signaling of closed position shall not take place unless it is certain that the movable contacts have reached a position in which rated normal current, peak withstand current and short time withstand current can be carried safely. Signaling of open position shall not take place unless

movable contacts have reached a position such that clearance between contacts is at least 80% of the isolating distance.

13.6. The position of movable main blade of each isolators and earthing switching shall be indicated by a mechanical indicator at the lower end of the vertical rod shaft for the isolator and earthing switch. The indicator shall be of metal and visible from operating level.

13.7. The isolator blades/earth switches shall be in continuous control throughout the entire cycle of operation. The operating rods and pipe shall be rigid enough to maintain control under adverse conditions to withstand all torsional and bending stresses arising from operation. All hinges / movable joints in current carrying parts shall be shunted with flexible copper conductors having adequate length and size to prevent breaking due to repeated operation. Operating rod of main and earth switch shall be pad lockable.

13.8. i) The mechanism box shall have neoprene gasket hinged door at front with locking facility. All accessories inside the housing shall be easily accessible.

ii) The box shall be suitable for mounting on structure as well as on plinth of adequate height.

iii) The Control Cabinet/Operating mechanism box shall be made of 3 mm (min.) thick Aluminium sheet such that it provides adequate rigidity and shall be provided with removable gland plates at the bottom of the box for connection of cables. Space heater with thermostat and switch as well as one 230 Volt combined 5A/15A AC plug with socket and switch shall be provided. Mechanism Box shall have Degree of Protection not less than IP-55 as per IS:13947

iv) Cubicle illumination lamp with door switch shall be provided.

v) Suitable reduction gear shall be provided between motor and the drive shaft of the isolator. The mechanism shall stop immediately when motor supply is switched off.

vi) Manual operation facility (with handle) should be provided with necessary interlock to disconnect motor.

vii) Gear should be forged material and suitably chosen (rust free) to avoid bending/jamming on operation after a prolonged non-operation.

13.9. Proper arrangement shall be provided for smooth transfer of rotary motion from motor shaft to the insulator along with stoppers to prevent over travel.

14. EARTHING :

Flexible conductor of adequate section shall be provided at the lower end of the vertical operating shaft for connection to station earthing system. It is for earth switch only. The frame of each Isolator and earthing switches shall be provided with two reliable earth terminals for Connecting G.S. Flat of 50×10mm for all voltage classes

15. SUPPORTING STRUCTURE :

The isolator shall be placed on rigid, self-supporting galvanized supporting structure. The base of the isolator shall be connected to the supporting structure through bolts of proper size as per requirement.

16. COMPLETENESS OF SUPPLY :

Any fittings, accessories or apparatus which may not have been mentioned in this specification but which are necessary for efficient operation / performance shall deem to be included in the contract.

17. GALVANISING :

All ferrous parts including nuts, bolts, washers and other ferrous parts shall be hot dip galvanised as per relevant IS to withstand at least six dips each of one minute duration in copper sulphate solution of requisite strength except threaded portion which should withstand four dips each of one minute duration.

18. GURANTEE :

Electrical characteristics shall be guaranteed by the bidder. In case of failure of materials to meet the guarantee, MePTCL shall have right to reject the material. Guaranteed Technical Particulars are to be submitted by successful bidder during detailed engineering alongwith submitted drawings/documents. However format for submission of GTP shall be handed over to intending bidders at the time of sale of tender documents.

19. CONTRACT DRAWINGS, CATALOGUE AND MANUAL :

19.1. After placement of Letter of Award (LOA) six (6) copies of various drawings, data and catalogue/manuals as mentioned below shall be submitted to the Chief Engineer Engg. Deptt., VidyutBhavan, Salt Lake, Kolkata – 700 091 for approval as well as for reference as applicable :

i) Dimensional general arrangement drawing with supporting structure showing disposition of all fittings and accessories, electrical parameters, electrical clearances between phases, phase to earth and live parts / terminals to ground etc.
ii) Technical catalogue of isolators explaining the function of various parts, principle of operation etc.
iii) Schematic diagram of electrical control and operating system of main isolator and earth switches.
iv) Plan, elevation and sectional views of contact assembly, operating mechanism etc.
v) Transport dimensions with weights.
vi) Foundation and anchor details including dead load and impact load with direction and also point of application.
vii) Assembly drawing for erection with part number and schedule of equipment.
viii) Name Plate particulars.
ix) Technical particulars and GA drawing of support insulator and operating rod insulator.

19.2 The contractor shall submit ten (10) sets of approved drawings for each type of isolator per sub-station to the Chief Engineer, Engg. Deptt.for distribution purpose. Six copies of instruction

manuals in binding form for each type of isolator per substation and data sheets for each rating of equipment shall be submitted. The manuals shall clearly indicate the installation methods, checkups and tests to be carried out for testing the equipment and maintenance procedure.

20. TEST AT FACTORY AND TEST CERTIFICATES :

20.1. Following routine tests at manufacturer's works shall be carried out. The contractor shall give at least 15 (fifteen) days advance notice to the Chief Engineer ,Engg. Deptt. intimating the actual date of inspection and details of all tests that are to be carried out :

i) Power frequency dry test of the main circuit. (May be omitted as per IEC 60694 cl.7.1 subject to dimensional checking as per dimensions shown in type test report).
ii) Voltage test on control and auxiliary circuits.
iii) Measurement of resistance of the main circuit
iv) Mechanical operation tests.
v) Routine test report for all Isolators is to be submitted along with inspection offer.

20.2 All Acceptance tests at manufacturer's works shall be carried out in presence of representative of MePTCL as per relevant IS & IEC. on every lot offered for inspection. In addition to above, all routine tests are also to be carried out on each Isolator as per relevant IS & IEC. Selection of samples for acceptance test as well as rejection and retesting shall be guided by relevant IS & IEC. The entire cost of acceptance and routine tests that are to be carried out as per relevant IS shall be treated as included in quoted price of Isolator. Three (3) copies of test reports shall be submitted to the Chief Engineer, MePTCL for approval and adequate extra copies for distribution to site.

21. TEST REPORTS AND TYPE TESTS:

Only type tested Isolator from the maker's list of MePTCL are to be offered conforming to our technical specification, and relevant IS and IEC. Isolator offered should be of similar type & similar design with ones on which type testing has been carried out as per relevant IS and IEC. Three sets of complete type test reports carried out in Govt. recognized Test House or Laboratory /NABL accredited laboratory shall have to be submitted by successful bidder positively alongwith submission of drawings during detailed Engineering. The submitted type test report shall proof that the type test have been carried out within five years from the date of submission of bid. For type test reports conducted before more than five years and if type test facilities are not available in INDIA, the purchaser shall have the discretion to accept previous reports. Successful bidder may require to produce original copies of type test reports at the time of detail Engineering if asked by MePTCL.
Each type test report shall comply the following information with test result

i) Compete identification, date and serial no .
ii) Relevant drawings as documented with test report.
iii) Method of application, Where applied, duration and interpretation of each test.
iv) Bidder shall quote price for carrying out type tests mentioned in the schedule for type test charges on 400KV class isolator so that the same can be carried out as per option of MePTCL. This price shall be considered for the purpose of evaluation of bids.

SPECIFIC TECHNICAL PARTICULARS

Sl. No.	DESCRIPTION	400KV	220 KV	132 KV	33 KV
1	Nominal System Voltage (KV)	400	220	132	33
2	Rated Voltage (KV)	420	245	145	36
3	Frequency (Hz)	50			
4	No. of Phases	3-phase			
5	System Neutral Earthing	Effectively Earthed			Through Earthing transformer
6	No of poles	3			
7	Location	Outdoor			
8	Rated Insulation Level				
A	1.2/50 micro-sec. lightning Impulse Withstand Voltage (KVp) i) Between line terminals and ground. ii) Between line terminals with isolator open.	± 1425 ± 1425 KVP impulse on one terminal and 240 KVP power frequency voltage of opposite polarity on other terminal.	±1050 ±1200	±650 ±750	±170 ±195
B	One minute PF withstand voltage (KVrms) i) Between line terminals and ground. ii) Between terminals when isolator is open.	520 610	460 530	275 315	70 80
C	250/2500 micro sec. Switching surge withstand test voltage (dry & wet). i) Between line terminals and ground. ii) Between terminals with isolator open.	± 1050 KVpeak 900 KVP impulse on one terminal and 345 KVP power frequency voltage of opposite polarity on other terminal.	- -	- -	- -
D	Corona extinction voltage (KVrms).	320 (min)			

E	Max. RIV at 1.1 Ur √3 at 1.0 MHZ (micro volts)	Less than 1000 at 266KVrms.			
9	Rated Normal Current(Amps)	3150 / 2000	2000/1600	2000/1250	1600/1250
10	Rated Short Time withstand current of Main Contacts and Earth Switch (KA) and duration (for 3 sec) and dynamic current (KAP) of isolator and Earth Switch.	i) 50 for 1 sec. ii) 125 KAP	i) 40 for 3 sec. ii) 100 KAP	i) 31.5 for 3 sec. ii) 78.5 KAP	i) 25 for 3sec ii) 62.5 KAP
11	Mounting Condition	On Structure			
12	Method of operation Mai / Earthing Switch n	Motor / Manua as well as local electrical operation having motor	Motor / Manual	Motor / Manual	Manual/ Manual
13	Number of auxiliary switches for main isolator	20 NO+20NC (min.)	10NO+10NC (min.)	10NO+ 10NC(min.)	6NO+ 6NC (min.)
14	Number of Make before break and break after break auxiliary switches	4 NO + 4 NC (min.)	2NO+2NC (min.)	2NO+2NC (min.)	--
15	Number of auxiliary Switches in Earth Switch	4 NO+ 4NC			
16	Rated auxiliary AC Supply (Volt)	400/230 V ±10%			
17	Rated auxiliary DC Supply (Volt).	220 ±10%			
18	Minimum creepage distance of support insulators (mm)	10500	6125	3625	900
19	Phase to phase spacing (mm)	7000	4500	2700	1500
20	Operating Time of isolator and Earth switch.	Less than 12 seconds			NA
21	Mechanical terminal load for horizontal centre break Isolator i) Straight Load (N) ii) Cross Load (N)	1600 530	1000 330	500 170	-
22	Mechanical terminal load for pantograph Isolator iii) Straight Load (N) iv) Cross Load (N)	2000 800	-	-	-
23	Rated magnetising / capacitive current make and break	0.7 Amps at 0.15 PF			
24	All Contacts	Silver –plated , minimum 20 micron			
25	Temperature rise above ambient temperature of 50 deg C corresponding to maximum continuous current (ºC)	Within limit as per table IV of IS : 9921(Pt. II) - 1982			
26	Cantilever strength of support insulator (Kgf)	800	600	400	400
27	Current Density of Copper (Max.) (A/Sq. mm.)	1.75	1.75	1.75	1.75

NB : The number of auxiliary switches are indicative. Supplier / manufacturer is to supply required number of auxiliary switches after detailed engineering.

CONTROL AND RELAY PANEL

TECHNICAL SPECIFICATION FOR CONTROL & RELAY PANEL
FOR 400KV, 220 KV, 132 KV AND 33 KV SYSTEMS

1.0 SCOPE:

1.01 The specification covers design, engineering, manufacture, testing & supply delivery at site of Control and relay Board and protection relay panels inclusive of internal wiring and with arrangement for external connection to various Switchyard equipments and Control room building equipments as necessary. The Contractor has to design the Schematics for protection and Control of all equipments including monitoring indications, visual and audible alarm, interlocking schemes between different equipment. Any other requirement which are not specifically covered here but which are necessary for successful commissioning of the Sub-station are also within the scope of the Contract. The same shall be indicated by the bidder with their price for MePTCL's consideration.

1.02 The equipment manufactured should conform to the relevant standards and of highest quality of engineering design and workmanship. The equipment manufactured shall ensure satisfactory and reliable performance throughout the service life.

2.0 STANDARDS:

2.01 Unless otherwise specified, all equipment and material shall conform to the latest IS applicable standards. Equipment complying with other internationally recognised standards will also be considered, if it ensures performance equivalent or superior to Indian standards. In the event of supply of equipment conforming to any international/ internationally recognised standards other than the standard listed below, the salient features of comparison shall be brought out and furnished along with the bid. One copy of such standard specification in English language shall be enclosed with the tender.

2.02 The equipment provided shall also comply with the latest revisions of Indian Electricity act and Indian Electricity rules and any other applicable Statutory provisions, rules and regulations.

2.03 All equipment provided under the specification shall generally conform to the latest issue of the following:

IEC/Indian Standard No.	Title
IS 3231 & IEC-255	Electrical relays for power system protection
IS 1248 & IS 2419	Indicating Instrument
IS 6236	Recorders
IS 722, IS 14697, IS 15959	Energy meters
IEC 679	Static TVM
IEC 337 & 337-1	Control Switches (LV Switching devices for control and auxiliary circuit)
IS 2705, IS 16227	Current Transformers
IS 3156	Voltage Transformer
IS 4237	General requirement for Switch gear and Control gear for voltage not exceeding 1 KV.
IS 375	Marking and arrangement for Switchgear Bus bars, main connection and auxiliary wiring.
IS 8686	Specification for static protective relays

3.00 QUANTITIES:

Quantities of Control, Relay & Protection panels are to be assessed by the bidders from the Schedule enclosed with this specification/ LOA. However, if any corridor in the switchyard layout is left for future use in between two proposed bays included in the project, blank panels without any equipment, relays etc but only with matching mimic are to be supplied.

4.0 TECHNICAL PARTICULARS FOR DESIGN OF CONTROL, RELAY AND PROTECTION PANELS:

4.01 SYSTEM DETAILS:

		400KV	220KV	132KV	33KV
a)	Nominal System Voltage	400KV	220KV	132KV	33KV
b)	Highest System Voltage	420KV	245KV	145KV	36KV
c)	Number of Phases	<---------- Three---------->			
d)	Frequency	<----------50 Hz +/- 3%---------->			
e)	Grounding	< -------- Effectively Earthed----------> through E.Tr.			
f)	Maxm.fault Current	50KA (rms)	40KA (rms)	31.5KA (rms)	-

4.02 AUXILIARY SUPPLY:

D.C. Supply voltage shall be normally fed from Battery charger and battery connected in parallel which is 220V +/- 10%. In case of failure of the AC supply to battery charger, DC Supply voltage will be available automatically from Battery. The D.C Supply voltage may vary from -10% to + 10%. The D.C. system shall be 2 wire with necessary positive earth fault and negative earth fault annunciation scheme. The ripple content in the D.C. supply from charger will be less than 2%.

AC Auxiliary supply voltage for the C&R panel shall be 230V, 1-phase, 50Hz grounded with +/- 10% voltage variation.

5.00 INDICATING INSTRUMENT RANGE:

Indicating instruments (Ammeter, Voltmeter, MW meter, MVAR meter) shall have site settable/ programmable CTR and the range of CT ratios shall be in line with final approved drawing of the respective equipment for the particular project.

Voltmeter Range: -	
400kV	0-500kV
220kV	0-250kV
132kV	0-150kV
33kV	0 – 40kV

6.0 PANEL DESCRIPTION, CONSTRUCTION AND FORMATION:

6.01 GENERAL REQUIREMENT:

a) The protection, control and relay board panels for 400KV system shall be duplex/simplex type (as per the Project LOA) so as to accommodate all the control equipment, breaker relays, meters etc. and the protective relays and its aux. relays/accessories as necessary for completeness of the protection/control scheme without overcrowding and cramping.

b) The control and relay board panel for 220KV system and 132KV system shall be duplex/simplex type (as per the Project LOA) for accommodating all relays and aux. relays for protection of respective circuit along with control equipment, meters etc. as necessary for completeness of the protection/control scheme without overcrowding and cramping.

c) The 33KV C&R board panels shall be simplex type for accommodating all the control, protection and metering equipment properly.

d) Size of individual panel shall be as stated below :

Type	Depth (mm)	Width (mm)	Height (mm)
Duplex	1982	as necessary but limited to 1000 mm	2312 including channel base.
Simplex	610	-do-	2250 including channel base

There shall be a corridor of 762 mm wide and access doors of 1900 mm height with latch at two ends of duplex panel board for inspection. The door with door frame shall be detachable type so that the same can be fitted to newly erected panel of similar design if any new C&R panel is added. The access door for the simplex type panel shall be at the back side and of 1900 mm height.

e) The front and rear parts of duplex type C&R panel shall be detachable and all interconnection between front and rear panels shall be through terminal connector and preferably underneath the top cover. The interconnection between the simplex type control and relay panel and duplex type respective C&R panels where applicable will be made through cables to be laid in the cable trenches under those panels.

f) The complete panel shall incorporate all necessary instruments, meters, relays, auxiliary relays, control switches, indicating lamps, mimic, annunciators, audible alarms, horizontal and vertical wiring trough, wiring supports, interior lighting system, terminal blocks fuses and links etc.

6.02 CONSTRUCTIONAL FEATURES:

a) The control & relay board shall comprise of cubicle type panels placed in juxta position to form a continuous board for each system voltage. If the panels are required to be aligned in right angular formation, the tenderer shall be required to arrange dummy/covering plates for the uniform formulation without any extra price.

b) The tenderer shall ensure that the equipment specified and such unspecified complementary equipment required for completeness of protection/control scheme be properly accommodated in the panels without congestion and if necessary to provide panels with larger width. No price increase at a later date on this account shall be allowed.

c) Panels shall be completely metal enclosed and shall be dust, moisture and vermin proof. The enclosure shall provide a degree of protection not less that IP-31 in accordance with IS-2147.

d) Panels shall be free standing, floor mounting type and shall comprise structural frames enclosed completely with specially selected smooth finished, cold rolled sheet steel of thickness not less than 3mm for weight bearing members of panels such as base frame, front sheets and door frames and not less than 2mm for sides, door, top & bottom portions. There shall be sufficient reinforcement to provide level surfaces, resistance to vibration and rigidity during transportation and installation.

e) All doors, removable covers and panels shall be gasketed all around with neoprene gaskets. Ventilating covers, if provided shall have screens and filters. The screens shall be made of either brass or GI wire mesh.

f) Design, material selection and workmanship shall be such as to result in neat appearance, inside and outside with no welds, rivets or bolt head apparent front outside, with all exterior surfaces tune and smooth.

g) Cable entries to the panel shall be from the bottom. The bottom plates of the panel shall be fitted with removable gland plates and fixed with cable glands. Total area of the gland plate may preferably be divided into at least two nos. equal size gland plates for easy termination of Control cable in future, if required. Necessary number of cable glands of sizes to suit external cables to the panels

shall be supplied by the bidder. Cable glands shall be screwed type made of brass and shall be suitable for PVC armoured cable.

h) Metal seals in the form of metal channels properly drilled shall be furnished by the Contractor along with anchor bolts and necessary hardware for mounting the panels. Panels shall be mounted on the other end of the channel.

6.03 MOUNTING:

a) All equipment on and inside the panels shall be mounted and completely wired to the terminal blocks ready for external connection. The equipment of panel shall be mounted flush.

b) Equipment shall be mounted such that removal and replacement can be accomplished individually without interrupting of service to adjacent devices and are readily accessible without use of special tools. Terminal marking shall be clearly visible and of permanent nature.

c) The contractor shall carry out cut out, mounting and wiring of the bought out items which are to be mounted in the panel in accordance with the corresponding equipment manufacturer's drawings.

d) The centre line of switches, push buttons and indicating lamps shall be not less than 750mm from the bottom of the panel. The centre line of relays and meters and recorders shall be not less than 450 mm from the bottom of the panel. However, the same shall be finalized during Detail Engineering.

e) The centre lines of switches, push buttons and indicating lamps shall be matched to give a neat and uniform appearance. Likewise the top of all meters, relays and recorders etc. shall be in one line.

f) The control switches for circuit breakers and isolators shall be located on the mimic diagram corresponding to their exact position of the controlled equipment in the single line drawing. The location of the switches shall be within working height from the floor level for easy and comfortable operation.

g) No equipment shall be mounted on the doors.

h) All the panels in the control room shall be matched with the other panels of the same C&R board in respect of dimension, colour and appearance. Control equipment on front side of the panel shall be similarly placed.

i) All the equipment connections and cabling shall be designed and arranged to minimise the risk of fire and damage.

6.04 PAINTING:

a) All unfinished surface of the steel panels and frame work shall be sand blasted to remove rust, scale, foreign adhering material or grease.

b) A suitable rust resisting primer shall be applied on the interior and exterior surfaces of the steel, which shall be followed by of an under coat suitable to serve as base and binder for the finishing coat. The finishing coat on the exterior of the panel & on the interior faces shall be as per following table: -

Sl. No.	**Painting**		
1	Colour	a) External Colour shade	Shade RAL 7032 (Pebble Grey)
		b) Internal Colour shade	White
		c) External Finish	Texture Semi Glossy
		d) Internal Finish	Texture Semi Glossy
		e) Base Frame Colour shade	Black
2	Type of Painting	Powder Coating	
3	Thickness of Paint	Average of Powder Coating	80-100 microns
4	Phosphating	Sheet Steel shall be phosphated in accordance to IS 6005	
5	Special Instruction	Small quantity of paint shall be supplied for minor touchup work required at site.	

6.05 PANEL INTERNAL WIRING:

a) All wiring shall be carried out with 1100V grade Single core, standard copper conductor wires with PVC insulation conforming to IS 694 or equivalent International Standard.

b) The minimum size of the stranded copper shall be as follows :

i)	All current transformer circuit	: 2.5 sq mm per lead.
ii)	Voltage transformer circuits	: 2.5 sq mm per lead
iii)	All other circuits	: 1.5 sq mm per lead.

c) The following colour scheme shall be used for the wiring :

Circuit where used	Colour of the wire
R - Y - B phase of instrument transformer circuit.	Red, yellow and blue for respective phases.
Neutral connections of the instrument transformer circuit.	Black
Earthing connection	Green
AC control wiring circuit for auxiliary AC supply.	Black
D.C. control wiring circuit using D.C. Battery supply.	Grey

d) All wires directly connected to trip circuit breaker or device shall be distinguished by addition of red colour unlettered ferrule.

e) All internal wiring shall be securely supported, neatly arranged, readily accessible and connected to equipment terminals and terminal blocks. Wiring gutters & trough shall be used for this purpose. The position of the PVC carrying troughs and having bunch of wires shall not give any hindrance for fixing or removing relay casing, switches etc.

f) Interconnection to adjacent panels shall be brought to a separate set of terminal blocks located near to the slots or holes to be provided at the top of the panel. The terminal blocks for the wires shall be with isolating links. Arrangements shall be made for easy connections to adjacent panels at site and wires for this purpose shall be provided and bunched inside the panel.

g) All wiring interconnecting the front cubicles with the near cubicles of duplex type panel over the access corridor shall be wired in gutters held against the ceiling of the corridor by means of screws and the interconnection shall be made through suitable terminal connectors securely fixed on the panel.

h) Longitudinal troughs extending throughout the full length of the panel shall be used for inter panel wiring. Inter connections to adjacent panels shall be brought out to a separate set of terminal blocks located near the slot of holes meant for taking the interconnecting wires. All bus wiring for interpanel connection shall be provided near the top of the panels running throughout the entire length of the panels.

i) Wiring connected to the space heaters in the cubicles shall have porcelain beaded insulation over a safe length from the heater terminals.

j) Wire termination shall be made with solder less crimping type and tinned copper lugs which firmly grip the conductor and insulation, ensuring optimum contact surface and also ease of removal of termination, if required. Insulated sleeves shall be provided at all the wire terminations. Engraved core identification plastic ferrules marked to correspond with panel wiring diagram shall be fitted at both ends of each wire. Ferrules shall fit tightly on the wire and shall not fall off when the wire is disconnected for any purpose. Termination shall be such that no strand of a conductor shall left loose or overhanging. Conductor termination shall be secured to the holding nuts/screws, terminal blocks etc. with washers interposed between the terminals/holding nuts/screw heads. The terminals shall be so connected that no conductor ferrule code gets masked due to overlay of conductors.

k) All spare contacts of relays shall be wired up to terminal blocks.

6.06 TERMINAL BLOCKS:

a) All internal wiring to be connected to the external equipment shall terminate an terminal blocks, preferably vertically mounted on the side of each panel. Terminal blocks shall be 1100 V grade and have 10Amp continuous rating, moulded piece, complete with insulated barriers, stud type terminals, washers, nuts and locknuts, inserts. The stud, washers, nuts, locknuts, inserts shall be tin plated Brass/Brass. Terminal block design shall include markings of terminals and the terminals shall be provided with transparent plastic, slip on/clip on terminal covers. Markings on the terminal strip shall correspond to wire number and terminal numbers on the wiring diagram.

b) Terminal blocks for current transformer and voltage transformer secondary leads shall be provided with test links and isolating facilities. Also current transformer secondary leads shall be provided with short circuiting and earthing facilities of adequate rating.

c) Each terminal block shall be provided with at least 20% spare terminals on each panel and these spare terminals shall be uniformly distributed on all terminal block.

d) In case of duplex panels, separate set of terminal blocks shall be provided with separate internal cable entries for the front (control) and rear (relay) sections.

e) Terminal blocks shall be suitable for connecting the following conductors on each side.

i)	All C.T. circuits.	: Two of 4.0 sq.mm. copper.
ii)	All P.T. circuits.	: Four of 2.5 sq.mm. copper.
iii)	AC/DC Power Supply Circuit	: Four of 2.5 sq.mm. copper.
iv)	All other circuits.	: Four of 1.5 sq.mm. copper.

f) There shall be a minimum clearance of 250 mm between the first row of terminal blocks and the associated cable gland plate. Also the clearance between two rows of terminal blocks shall be minimum of 150mm.

g) The number & sizes of the multicore incoming cable will be as per approved scheme. All necessary cable terminating accessories such as gland plates packing glands, crimp type tinned copper lugs, supporting clamps and brackets, wiring troughs and gutters etc. for cable shall be included in contractor's scope of supply.

g) All studs, nuts, screw etc. shall be threaded according to IS:7684 or equivalent International Standards.

6.07 MIMIC DIAGRAM:

a) Coloured mimic diagram and symbols showing the exact representation of the system shall be provided in the front of control panels.

b) Mimic diagram shall be made preferably of anodized aluminium or plastic of approved fast colour material which shall be screwed on to the panel and can be easily cleaned. The mimic bus shall be 2mm thick. The width of the mimic bus shall be 10mm for bus bars and 7mm for other connections. Indicating lamp, one for each phase for each bus shall be provided on the mimic of Bus coupler panel of three Bus system or at Transfer bus panel of two bus system to indicate bus charged condition.

c) Colour scheme for mimic diagram.

KV Class	C o l o u r	Shade Index as per ISS
400KV	Dark Violet	796
220 KV	Light orange	557
132 KV	Signal Red	537
33 KV	Brilliant green	221
11 KV	Air Craft blue	108
400/230 V	Black	309
Earth	White	-
110 V	Canary yellow	-

d) LED Position Indicators, Round type, for all earth switches & isolators control switches and discrepancy type control switch with flash type built-in indicating lamp, for circuit breakers shall be mounted along the mimic diagram at appropriate location in 400KV, 220 KV and 132 KV duplex type C&R panels.

In 33KV simplex type C&R panels, LED Position Indicators for the position indication of isolators, earth switches and ON/OFF indication for such breaker shall be mounted along the mimic diagram at appropriate location.

6.08 NAME OF IDENTITY PLATES:

a) All instruments, relays and such other similar electrical devices mounted on the control and relay panel shall be provided with name plates bearing the manufacturer's name, serial identifying number and the Electrical rating data.

b) 25mm wide plastic plates bearing suitable identification marks shall be fixed under the terminal wiring at the test blocks, at the fuse blocks and at the cable terminals. Similar plates shall be fixed on the exterior of the switch board in appropriate places to indicate function of control switches, push button etc. such as isolator control switch, breaker control switch, DC fail test, accept reset etc. Suitable identification marks shall be provided for individual casing part of the relays and other equipment.

c) 50mm wide plastic plate bearing suitable circuit description (which will be furnished after order is placed) etched in 30 mm size letters shall be provided for each panel and mounted on the top of both outer and inner sides of the front and rear panels. These plates shall be removable type.

d) Each unit of control and relay panel shall be provided with a label located at the bottom on the front and shall contain the following details:

   i) Manufacturer's name
   ii) P.O.no. and date
   iii) Drg. ref. no. that pertains to the panel.

6.09 CONTROL AND RELAY BOARD PANEL LIGHTING & ACCESSORIES:

a) Each unit of cubicle interior (both control and relay panel) shall be illuminated by LED connected to 230V single phase AC through individual switch for duplex type panel and through Door switch for Simplex type panel. The illumination of the interior shall be free from hand shadows and shall be planned to avoid any strain or fatigue to the wireman likely to be caused due to subnormal or non-uniform illumination. One emergency D.C. light (LED) shall also be provided for each panel with individual switch with proper identification mark.

b) Corridor of the duplex type control and relay board formation should be illuminated with adequate no. of LEDs, AC operated, through door operated push button switch provided at both sides.

c) One 15 amps. 3 pin power socket outlets together with plug pins shall be provided at convenient points in each panel with marking at the bottom for obtaining AC supply wherever required.

d) The above AC auxiliary supply and DC emergency lamp ckt. in each panel shall be HRC fuse and link protected.

6.10 SPACE HEATERS:

Tubular space heater suitable for connection to the single phase AC supply in each panel (both control and relay panel in case of duplex type) complete with switches and thermostat located at convenient position shall be provided at the bottom side of the cubicle to prevent condensation of moisture. The watt loss per unit surface temperature of the heater shall be low enough to keep surface temperature well below allowable heat. The wattage of the heater shall be such as to keep 10°C above average ambient temperature in the rainy season but the temperature shall not under any circumstances damage the insulation of the wiring of the panel.

6.11 SAFETY EARTHING:

a) All panels shall be provided with an earth bus securely fixed along with the inside base of the panel extended throughout the length of the C&R board formation. The material and size of the earth bus bar shall be 25mm x 6mm size copper. Provision shall be made for extending the earth bus bars at a future date into new adjacent panels to be installed if any. Provision shall be made at the end panels for connecting the same to the system earth grid mat.

b) Earthing of current free metallic parts or metallic bodies of the equipment provided in the switchboard shall be done with soft drawn conductor of size not less than 2.5 sq.mm.

c) The neutral point of star connected LV winding of instrument transformers and one corner of the open delta connected LV side of instrument transformers shall be similarly earthed with the main earth bar of the switchboard earthing system.

6.12 FUSES AND LINKS:

H.R.C. Cartridge fuse and link of adequate current and voltage rating shall be provided inside the cubicle in an easily accessible location. The selection of the main and sub circuit fuse ratings shall be such as to ensure selective clearance of sub circuit faults. Fuses shall have operation indicators for indicating blown fuse condition. Fuse carriers and bases shall have imprints of rating, voltage and circuit designation.

7.0 INDICATING LAMPS AND SEMAPHORE:

a) These lamps shall be of LED type and suitable for being operated on S/S D.C. voltage or AC voltage or P.T. secondary supply as and where applicable. All Lamps shall be interchangeable, panel mounting type with rear terminal connection and shall afford easy replacement from the front of the panel. Lamps shall have translucent lamp covers to diffuse lights and coloured Red, green, Amber, clear white or blue as specified. The lamp cover shall be of screwed type, unbreakable and mounded from heat resisting material. The indicating lamps with resistors shall withstand 120% of rated voltage on a continuous basis.

b) No tools shall be required for replacing the bulbs and lenses.

c) The colour scheme of the signal lamps shall be as follows:

Function	Colour lens
C.B. spring charged/compressor healthy indication	Blue
C.B. Trip circuit healthy	Milky White
Alarm Bus and incoming D.C. fail indication.	Amber
P.T. supply healthy indication (Bus bar healthy indication).	Red/Yellow/Blue
C.B. ON-OFF Indication (33kV & below)	Red/Green

d) LED type Semaphores are to be used for status indication of Circuit Breaker and Isolator.

8.0 CONTROL SWITCHES:

a) All control switches shall be of the rotary type provided with escutcheon plates clearly marked to indicate status of the switch. They shall be semi flush mounted with only the switch front plate and operating handle projected out. All such control switches shall be provided for remote operation of isolators and circuit breakers.

b) All Control switches shall be wire connected at the back. The contact mechanism shall be cam operated. The contacts shall be silver faced and designed for liberal rating of the duty involved. The contacts shall be provided with dust and vermin proof removable protection cover. The protection

cover shall preferably be of transparent, inflammable material made of moulded dielectric material. Springs to be provided in the switch shall not be used as current carrying parts. The contacts provided in the switch shall be suitable for easy assembly/disassembly during replacement of the contacts. The control switch springs shall be strong to prevent any inadvertent operation due to a light touch on the handle.

c) Control switches for 400KV, 220KV & 132KV circuit breakers shall be of discrepancy type with built in pilot lamps and having two maintained contact positions for "ON" and "OFF" positions and two momentary contact positions for "ON" and "OFF" impulse. The built-in pilot lamp shall give a steady light when the position of the control switch corresponds to the position of the associated circuit breaker. A flickering light shall be given by the same lamp when due to hand operation or due to automatic tripping of the circuit breaker the position of the control switch does not coincide with that of the corresponding circuit breaker. The arrangement to provide the flickering voltage for the above purpose shall be made by the contractor. In order to avoid continuous burning of the aforesaid built-in lamps associated with the control switches, the said lamp shall be connected through a switch. The circuit should be such that irrespective of the position of the aforesaid switch winking of the lamp shall not be affected by change in respective control switch position. The winking of the control switch pilot lamp shall be followed by an alarm annunciation after a preset time adjustable between 0-10 secs. Switches complete with accessories for the above function shall be supplied.

d) Control switches for 33KV circuit breakers, 400KV, 220KV isolators, 132KV isolators shall be with pistol grip type operating handle having "ON & OFF" monetary operating position and an automatic return to normal neutral position on release from operated positions.

e) At bay level, Bay Control IEDs (if considered in respective LOA) shall provide all bay level functions regarding control and monitoring, inputs for status indication and outputs for commands. Bay Control IEDs shall not depend on any Numerical Protection IED or other equipment for the above functions.

f) Clear control priorities shall prevent operation of a single switch at the same time from more than one of the various control levels, i.e. remote control centre, station HMI, bay level or apparatus level. The priority shall always be on the lowest enabled control level.

9.0 SELECTOR SWITCHES AND CHANGE OVER SWITCHES:

a) Instrument selector switches shall be provided for indicating instruments while change over switches shall be provided for selective operation of controls such as auto/ non auto reclose, trip circuit transfer from main breaker to transfer breaker. Protection selector switches are to be provided in the Bus transfer bay and shall be used for adopting the bus transfer bay protection during Bay transfer condition, when line side C.T. operated protection of any bay develops any defect. All these switches shall be stay put type.

b) Voltmeter selector switch shall be suitable for reading all line to line and line to neutral voltage for effectively earthed system. This selector switch shall be of the rotary oval head or knob type.

c) Trip circuit transfer switch shall be of 3-position Normal-Inter-Transfer. Operating handle shall be pistol grip, lockable at Normal position and key trapped at transfer position having one common key for all 400KV, 220KV, 132KV and 33KV panels respectively for a particular Sub-station.

d) Protection selector in Bus Transfer bay shall be lockable type, two/three position depending upon scheme requirement.

e) One four position selector switch for setting group selection in respect of distance relay in Bus Transfer panel shall be provided.

f) One three position selector switch for setting group selection in respect of numerical over current & earth fault relay in Bus Transfer panel shall be provided.

g) One five position Selector Switch for Earthing Transformer selection in each 33KV side transformer C&R panel shall be provided.

10.0 SYNCHRONISING SWITCH:

a) Synchronising switch with lock feature two positions, "ON & OFF" shall be provided on all control panels except the 132/33KV Transformer panel and 33KV C&R panels. The switch shall be semi flush mounting type.

b) The switch shall be wired back connected. It's operation in the "ON" position shall connect the incoming and running bus potentials to the respective synchronising instrument and relay mounted in a trolley, through a synchronising socket having sufficient nos. of ways. The wiring between the synchronising switch, socket and the main breaker control switch shall be such that when the main breaker control switch is operated to close position, the breaker shall not receive a close command unless the synchronising switch is put to the 'ON' position and receives a synchronising command. If the synchronising trolley is not within the scope of supply for a particular sub-station, the terminal of the synchronising socket to be shorted through a plug to be provided to cover the socket.

11.0 PUSH BUTTON SWITCHES:

a) Push button switches, provided where required, shall be of the monetary contact type wired back connected. They shall be semi flush mounted. They shall be provided with integral inscription plates engraved with their functions.

b) All push buttons shall be with a set of NO/NC contacts as required to fulfill the scheme requirement. The contact faces shall be silver plated and shall able to make/break and carry the rated current appropriate to the duty of the desired function.

12.0 INDICATING INSTRUMENTS, RECORDERS & TRANSDUCERS:

All instruments, meters, recorders and transducers shall be enclosed in dust proof, moisture resistant, black finished cases and shall be suitable for tropical use. All megawatt, megavar, Bus voltage and frequency indicating instruments shall be provided with individual transducers and these shall be calibrated along with transducers to read directly the primary quantities. They shall be accurately adjusted and calibrated at works and shall have means of calibration check and adjustment at site. The supplier shall submit calibration certificates at the time of delivery. However no separate transducers are envisaged for digital bus voltmeters and digital frequency meters and the indicating meters provided in the synchronising equipment. Necessary complete wiring arrangement for Intelligent Electronic Meters along with supply of TTB & De-linked type Terminal Block shall be within the scope of supply of the bidders.

For greenfield SAS substations without any control panel, for each bay one no. MFM is to be provided in series with BCU Metering circuit at Relay panel.

12.01 INDICATING INSTRUMENTS:

a) Unless otherwise specified, all electrical indicating instruments shall be of digital type suitable for flush mounting.

b) Instruments shall have 4-digit display; display height being not less than 25 mm

c) Instrument shall confirm to relevant IS and shall have an accuracy class of 0.5 or better. Watt and Var meters shall have an indication of (+) and (-) to indicate EXPORT and IMPORT respectively.

d) Digital voltage and frequency meters shall be of class: 0.5 and shall have digital display of 5 and 4 digits respectively, with display size, not less than 25mm (height).

e) All indicating instruments shall preferably of size 72mm X 144mm.

12.02 TRANSDUCERS:

a) Transducers (for use with Indicating Instruments and Telemetry/Data Communication application) shall in general conform to IEC:688-1

b) The transducers shall be suitable for measurement of active power and reactive power in three phase

four wire unbalanced system.

c) The input to the transducers will be from sub-station current & potential transformers. The output shall be in milli ampere D.C. proportional to the input & it shall be possible to feed the output current directly to the telemetry terminal or indicating instruments.

d) The transducer characteristic shall be linear throughout the measuring range.

e) The transducer output shall be load independent.

f) The input & output of the transducer shall be galvanically isolated.

g) Each transducer shall be housed in a separate compact case and have suitable terminals for inputs & outputs.

h) The transducers shall be suitably protected against transient high peaks of voltage & current.

i) The transducer shall withstand indefinitely without damage and work satisfactorily at 120% of the rated voltage and 120% of the rated input current as applicable.

j) The active & reactive power transducer shall have dual output of 4-20mA.

k) The response time of the transducers shall be less than 1 second.

l) The accuracy class of transducers shall be 0.5 or better for watt/VAR transducer.

m) The transducers shall have a low AC ripple on output less than 1%.

n) The transducers shall be suitable for load resistance of 1000-1500Ω

13.00 TEST BLOCK:

Switch Board type, back connected, test blocks with contacts shall be provided with links or other devices for shorting terminals of CT leads before interrupting the normal circuit for injection from external source or for inserting testing instruments in the circuit without causing open circuit of the CT. The potential testing studs shall preferably be housed in block molding insulation and partition shall be provided to prevent accidental short circuit across the studs. Test blocks for meters, relays shall be placed in front and rear panel respectively.

14.0 DC, AC AUXILIARY SUPPLY AND V.T. SECONDARY SUPPLY DISTRIBUTION SCHEME:

14.01 DC SYSTEM:

DC distribution in CRP panels shall be designed with the consideration that two sets of batteries (220V), their respective chargers and DC boards shall be used for DC supply for all new substations.

14.02 INCOMING DC SCHEME:

For CRP panels of different voltage class, the Incoming DC scheme shall be as mentioned below:

400kV	Two DC incomers (220V) for panels of each bay, as DC supply - 1 and DC supply - 2.	
220kV	Two DC incomers (220V) for panels of each bay, as DC supply - 1 and DC supply - 2.	
132kV	Only two DC incomers (220V) as DC supply - 1 and DC supply - 2 for the entire panel board. One suitably rated HRC fuse unit both at +ve and -ve side shall be provided for each D.C. incomer in Bus Transfer (2 bus system)/ Bus Coupler (GIS or 3 bus AIS system) panel.	D.C. incoming buses of 132KV Panel shall run continuously in the panel board. Individual panel D.C. supply shall be teed off in each panel from the two D.C. buses.
33kV	Only two DC incomers (220V) as DC supply - 1 and DC supply – 2	D.C. incoming bus of 33KV CR Panel shall run

	for the entire panel board. One suitably rated HRC fuse unit both at +ve and -ve side shall be provided for each D.C. incomer in Bus Transfer/ Bus Section (2 bus system)/ Bus Coupler (3 bus system) panel.	continuously in the panel board. Individual panel D.C. supply shall be teed off in each panel from the above two D.C. buses.

Necessary arrangement for Supervision of the both the incoming DC supplies shall be made in each panel.

14.03 DC CIRCUIT IN 400kV, 220kV AND 132kV PANELS:

a) Following circuits for each bay shall be connected, as tabulated below:

Sr. No.	Circuit	Connection	Duplex panel	Simplex panel
1.	Power supply circuit of individual IED	through separate suitable HRC fuses	Auto Changeover DC	
2.	LBB scheme (only in 220kV & 132kV Bus Transfer/ Bus Coupler panel, as applicable)	through suitable HRC fuses	Auto Changeover DC	
3.	VT Selection circuit	through MCB	Auto Changeover DC	
4.	CB Aux. Relay circuit and CT Supervision circuit (only for SF_6 CTs)	through MCB	Auto Changeover DC	
5.	Transformer Supervision circuit	through MCB	Auto Changeover DC	
6.	GIS LCC Supervision circuit	through suitable HRC fuses	Auto Changeover DC	
7.	D.C. emergency lamp circuit	through suitable HRC fuse	DC Supply – 1	Auto Changeover DC
8.	Metering circuit	through suitable HRC fuses	DC Supply – 2	Auto Changeover DC
9.	Isolator control circuit	through MCB	DC Supply – 1	N.A.
10.	Synchronising circuit	through suitable HRC fuses	DC Supply – 1	N.A.
11.	Indication circuit	through suitable HRC fuses	DC Supply – 2	N.A.

b) The above circuits, which are connected to Auto Changeover DC, will be automatically fed from healthy DC Supply, in the event of failure of the Selected DC Supply. Necessary additional high speed electrically set – reset type relays having high current carrying capacity and inductive breaking capacity shall be considered to develop this auto Changeover scheme.

c) The above circuits, which are connected to DC supply – 1, will be fed from DC Supply – 2 in the event of failure of DC Supply – 1 and vice versa. Changeover shall be Manual (by using two-position Selector switch, DC - 1 / DC – 2)

d) DC supply – 1 & 2, drawn to each C&R panel, shall be divided into the following sub circuits through suitable HRC Fuses.

   i) CB Closing circuit
   ii) CB Trip coil – 1 shall be fed from DC supply – 1.
   iii) CB Trip coil – 2 shall be fed from DC supply – 2.

e) For 400kV system, DC Supply - 1 & 2 to Protection panel of a bay shall be fed from Relay panel of that bay directly.

f) LBB protection scheme DC shall be formed in 220kV & 132kV Bus Transfer/ Bus Coupler panel, as applicable, and shall run through all panels as bus wires. In individual panels this supply will feed the LBB scheme through isolating links.

g) In case of GIS substations, from Control/ Relay panel the DC supply - 1 & 2 will be teed off from the resp. incomer D.C. bus to LCC panel. For remote operation of GIS equipment the operational DC will generate from LCC through LOCAL/ REMOTE switch of LCC. Necessary separate relays shall be considered for Supervision of both LCC DC Supply - 1 & 2.

14.04 D.C. CIRCUIT IN 33 KV C&R PANEL/ INTEGRATED SWITCHGEAR:

Following circuits for each bay shall be connected to Changeover DC supply:

CB Closing circuit	through suitable HRC fuses
CB Trip coil – 1	through suitable HRC fuses
CB Trip coil – 2	through suitable HRC fuses
Power supply circuit of individual IED	through suitable HRC fuses
Isolator control circuit	through MCB
Transformer Supervision circuit	through MCB
CB Aux. Relay circuit	through MCB
Synchronising circuit	through suitable HRC fuses
D.C. emergency lamp circuit, separately for Control and Relay panel	through suitable HRC fuses
Metering circuit	through suitable HRC fuses
Indication circuit	through suitable HRC fuses

Changeover shall be Manual (by using two-position Selector switch, DC - I / DC - II)

14.05 ANNUNCIATION D.C. CIRCUIT:

There shall be one DC incomer (220V) from DCDB to Bus Transfer (2 bus system)/ Bus Coupler (3 bus system) panel through 16A HRC Fuse (both +ve and –ve) as Annunciation DC supply. Necessary arrangement for supervision of the incoming Annunciation DC Supply shall be made in Bus Transfer (2 bus system)/ Bus Coupler (3 bus system) panel. D.C. annunciation bus shall be teed off from the Bus Transfer (2 bus system)/ Bus Coupler (3 bus system) panel of each system for annunciation system and the same shall run continuously through the entire C&R board for facia annunciation system in respective panels.

14.06 AC CIRCUIT:

a) 230V, single phase 50Hz AC auxiliary supply to the control, relay and protection panel board of each system voltage of 400KV, 220KV, 132KV and 33KV will be fed from AC distribution board through separate 32Amp. switch fuse units provided there.

b) The supply shall be provided in Bus coupler/ Bus Transfer/ Bus Section panel for each voltage class. One 16Amp rated HRC fuse unit shall be provided for the AC incomer. AC incoming bus shall run continuously in each voltage class panel board.

c) Individual panel AC supply shall be teed off in each panel from the AC bus. A set of fuse and link rated for 10Amps. for 3 pin plug circuit, cubicle lamp circuit, space heater circuit shall also be provided in each control, relay and protection panel.

d) Door operated corridor illumination lamp circuit of duplex type panel shall be arranged from the above incoming AC bus through suitably rated fuse and link.

e) AC circuit for incoming DC fail and Annunciation DC fail alarm scheme shall be provided in Bus coupler/ Bus Transfer/ Bus Section panel for each voltage class. The above circuit shall be teed off from the above respective panel AC bus through suitably rated fuse and link.

f) One supervision relay for incoming AC fail with test P.B. and reverse flag indication shall be provided for monitoring of AC supply healthiness through D.C. operated facia annunciation in Bus coupler/ Bus Transfer/ Bus Section panel for each voltage class.

14.07 V.T.SECONDARY SUPPLY DISTRIBUTION SCHEME:

PT kiosk at switchyard may be considered with sufficient terminals, fuses, links etc for protection PT secondary supply and for metering PT secondary supply to bus coupler panel through individual cable for all voltage class in a substation.

a) The bus coupler panel shall receive protection VT secondary volts through fuses and links provided in the respective VT kiosk. The protection VT supply shall run throughout entire board for each panel through VT supply selection scheme.

b) The Bus Coupler panel shall also receive Metering VT Secondary volts by at least 25Sqmm Copper/ equivalent Aluminum per phase/neutral through fuses and links provided in the respective VT kiosk. The Metering VT supply shall also run throughout entire board for each panel through VT supply selection scheme.

c) VT secondary volts from all Protection cores and Metering core shall be first terminated to de-linked type TBs in each bay panel before wiring to the VT selection scheme.

d) Selected VT secondary supply to the protective relays of each panel shall be fed through individual fuses in individual phases and link in neutral in each panel. Necessary arrangement for supervision of VT secondary supply shall be provided in numeric relay.

e) Selected VT secondary supply to metering and indicating instruments of each panel shall be fed through MCB. Proper arrangement of supervision through MCB shall also be provided.

f) For 400KV/ 220KV system three sets VT selection relays shall be provided. In 132KV C&R panel, where more than one set of 132KV PT is available or not, necessary 132KV PT selection scheme shall be adopted and made ready for future use. Where more than one set of 33KV bus PT is available, necessary 33KV PT selection scheme shall be adopted through switch at 33KV C&R panel.

15.0 ANNUNCIATION SYSTEM:

15.01 INCOMING DC FAIL AND ANNUNCIATION BUS DC FAIL ALARM SCHEME:

Each voltage class system shall have alarm scheme, as follows: -

i) Incoming DC-1/ DC-2 supervision shall be provided in each panel.

ii) In Bus bar protection panel, DC fail supervision shall be provided.

iii) Audible AC alarm shall be provided for Incoming DC/ Annunciation DC Fail.

iv) The "Annunciation Bus D.C. alarm scheme" shall be common to the entire C&R board and operated from 230V single phase AC auxiliary supply for audible as well as visual alarm through lamp and bell arrangement. This will be provided at the Bus Coupler/ Bus Transfer/ Bus Section panel.

The scheme shall comprise of D.C. supervision relays with test push buttons for Annunciation bus DC system, AC operated alarm accept relays, indication lamp, AC operated hooter and push button for cancellation of audible alarm, as necessary.

v) Annunciation DC and AC shall be supervised by the Annunciator through auxiliary AC supply / DC supply resp. of the Annunciator in each panel.

15.02 OTHER TRIP AND NON-TRIP ALARM SCHEME:

a) Facia annunciation system shall be provided in each control panel by means of visual and audible alarm to draw attention of the operator to the abnormal operation or operation of the protective devices. The annunciation shall be divided into the following categories:

i) Trip annunciation

ii) Non Trip annunciation

The annunciator shall be suitable for operation with the sub-station AC/ DC voltage and potential free initiation contact is to be provided. Annunciator must have communication port, suitable for SCADA/ SAS operation, and this connection is to be established during commissioning.

b) The visual facia widow shall be flush mounted at a convenient position near top row of the control panel and necessary switching relays for the same shall be mounted inside the panel or at the relay side of the panel.

c) The annunciator facia shall be provided with translucent glass or plastic cover plates of white colour with inscription in black colour. The size of facia window shall be 70mm x 35mm in general and the size of the lettering shall not less than 5 mm. Alarm inscription shall be engraved not more than three line of in each facia window and the same shall be prominently visible when facia light is ON. The cover plates of the facia window shall be easily removable to facilitate replacement of lamp when required. Annunciator of each bay must have minimum 5-6nos. spare windows available.

d) The transparency of cover and wattage of the lamp provided in the facia window shall be adequate to ensure clear visibility of the inscription from the location of the operator's table in the control room having high illumination intensity. Each facia window shall be provided with two lamps to ensure safety against lamp failure. Long life lamp shall be used having resistor of adequate rating in series.

e) Annunciator should have in-built Accept, Reset and lamp Test push buttons for acknowledgment of alarm, reset of visual indication and for checking perfectness of the lamps shall be provided below the facia window in each panel. These push buttons shall be common for both trip and warning annunciation. The sequence of operation of the annunciation shall be as follows:

Alarm Condition	Fault contact	Visual Annunciation	Audible Annunciation
Normal	Open	OFF	OFF
Abnormal	Close	Flashing	ON
Accept push button is pressed.	Close	Steady ON	OFF
	Open	Steady ON	OFF
Reset push button is pressed.	Close	ON	OFF
	Open	OFF	OFF
Lamp test push button is pressed.	Open	Steady ON	OFF

f) In case static annunciation system is used, care should be taken that no spurious alarm condition arises due to external influences on the annunciator wiring and switching disturbances from the neighboring circuits within the panels. The static relay shall be suitable for operation within a temperature range from 0°C to 55°C.

g) The annunciation scheme should be such that momentary closing of any fault contacts shall also cause operation of annunciation system as above.

h) The annunciation facia window shall be programmable between Trip annunciation and Non-trip annunciation using DIP switches at site easily.

15.02.01 TRIP ANNUNCIATION:

Trip annunciation shall be used to draw attention of the operator when the circuit breaker is tripped automatically through relay. One hooter is to be provided in each panel for audible annunciation. Visual annunciation shall be provided by flickering of a facia window.

15.02.02 NON-TRIP ANNUNCIATION:

Non-Trip annunciation shall be used to draw attention of the operator to abnormal operating condition of certain equipment for immediate action to avoid tripping of circuit breaker. One bell with

different tone is to be provided in each panel for audible annunciation. Visual annunciation shall be provided by flickering of a facia window.

16.0 RELAY:

GENERAL REQUIREMENT:

The main numerical protective relays shall be of Panel manufacturer's own make or their principal company's make.

However, panel manufacturer, who are authorized by relay manufacturer to supply their relay, may also be considered for supply of C&R panel. This acceptance is subject to strict compliance to the following conditions: -

- **i) The panel manufacturer must be enlisted in MePTCL maker's list as on date of NIT and meet all the Qualification Requirement to be eligible.**
- **ii) The panel manufacturer should provide document/ certificate of guarantee from the relay manufacturer.**

Live demonstration of any offered relay has to be arranged by the Party at the laboratory of Central Testing Department of MePTCL prior to approval, if felt necessary by MePTCL. The turn-key bidder shall be required to make necessary arrangement without any extra price.

16.01 All shall conform to the requirement of IS: 3231 / IEC 255 and shall be suitable for operation within a temperature range 0ºC to 55ºC and 50% to 95% relative humidity. Relays shall be suitable for flush/ semi flush mounting on the panel with connections from the rear, protected with dust tight cases for tropical use and with transparent cover removable from the front.

16.02 All protective relays shall be in draw out case or plug-in/modular cases with proper built in testing facilities. If testing devices are not incorporated in the relay itself separate test block and switches shall be provided. The adjusting devices shall be accessible with the relay mounted on the panel board. Flag type operating indicators and flag indicator reset devices shall be provided which shall be suitable for operation from the front of the relay case without opening the cover.

16.03 All A.C. relays shall be suitable for operation at 50Hz.The current coils shall be rated for a continuous current of 1 amp and the voltage coil for 110V normal. The contacts of the relays shall be properly designed to prevent or minimise damage due to arcs which have to be broken successfully against 220 +/- 10% volt DC. When open the contacts shall withstand a voltage of 115% of the normal circuit voltage. The relays shall be designed for satisfactory operation between 70% and 110% of rated D.C. voltage of the sub-station. The voltage operated relays shall have adequate thermal capacity for continuous operation.

16.04 Timers shall be of static type. Pneumatic timers are not acceptable.

16.05 The sub-stations may be required to run without air-conditioning plant. Therefore, the static relays shall be designed for operating satisfactorily under the climatic conditions of ambient temperature and relative humidity variation from 0ºC to 55ºC and 50% to 95% respectively. The static relays should be capable to withstand the test voltages as stated in the relevant Indian standard or equivalent. Stringent measures including shielding of long internal wiring should be taken to make the relays insensitive to the voltage spikes. Insulation barriers shall be provided to ensure that transients present in CT & VT connection due to extraneous sources do not cause damage to static circuits.

16.06 DC/DC converter shall be provided in the solid state protective relays wherever necessary in order to provide a stable auxiliary supply for relay operation. Provision of D.C. Cells in the protective relays as reliable standby power supply will however not be acceptable. The DC/DC converter shall have power supply failure annunciation contact.

16.07

a) The solid state relays shall be stable and suitably protected against transient/ induced over voltages and noise signals. The bidder shall state clearly in the list of special requirement, if any, for D.C. input arrangement or cabling considered necessary for satisfactory operation of proposed solid state relays.

b) All the Numerical Relays should have setting parameter access restriction. All the numerical relay should have provision for setting all the features available in the relay and viewing those setting as well as different other parameters through both built in display unit as well as through PC. The supply of relay should be inclusive of necessary software and hardware for interfacing with a PC, to be supplied by the bidder. The bidder/manufacturer has to make arrangement for communication with all relays, along with supply of cables, connectors, communication port, converters etc. as necessary for downloading the storage data for all microprocessor/ numeric relays, disturbance recorder and fault locator etc. through a centralized PC. The necessary PC, window based Licensed software along with operating system software and all the necessary hardware for establishing the Network in latest IEC 61850, Ed - 2 platform to be considered in the scope of supply by the bidder.

The relays shall have the provision for Man to Machine Communication for local and remote control and monitoring complete with software, ports and other hardware e.g. required numbers PC hook up cable for direct communication, one for each type of relay.

Bidder shall arrange for such local man to machine communication facility for all the numerical relays inclusive of all the necessary accessories as mentioned above complete through Local Area Networking System for each 400KV, 220KV & 132KV substation wherever mentioned in the schedule.

For existing and new substations, provision is to be made for connectivity with the existing and/ or future numerical relays through PC by providing external comport multiplier (e.g. Rocket port/Serial sharer etc.).

The electronic devices on bay shall be connected to the communication infrastructure for data sharing and meet the real-time communication requirements. The communication shall be made in fault tolerant ring in redundant mode INCLUDING the links between individual bay IEDs to switch, such that failure of one set of fiber shall not affect the normal operation. However failure of fiber shall be indicated through alarm/ annunciation. Each fiber optic cable shall have four spare fibers.

The data exchange between the electronic devices on bay and station level shall be realized using fiber optic cables, thereby guaranteeing disturbance free communication. The fiber optic cables shall be run in suitable, preferably GI, conduit pipes. Data exchange is to be realized using latest IEC 61850, Ed - 2 protocol with a external managed switched optical Ethernet communication infrastructure in decentralized ring configuration.

All the protective relays shall be numerical type and communication protocol shall be latest IEC 61850, Ed - 2 compatible with the following features:

i) All Numerical Protection IEDs as well as BCU shall be IEC 61850, Edition – 2 compliant.
ii) Peer-to-peer communication using GOOSE messages (latest IEC61850, Ed - 2) for interlocking.
iii) Interoperability with third party IEC 61850, Ed - 2 (latest version) compliant devices.
iv) Generate XML file for integration/ engineering with vendor independent SCADA systems.
v) Should be directly connected to the inter bay bus on IEC 61850, Ed - 2 (latest version) without the use of any gateways. Connections of bay protection IEDs to the IEC 61850, Ed - 2 bus (latest version) through the bay control units are not acceptable.
vi) All Numerical relays must be PRP compliant for SAS.

vii) Numeric relays with non-programmable Inputs and non-programmable outputs are not acceptable.

All the numerical relays shall have one front port for direct access with proprietary protocol, rear ports with latest IEC 61850, Ed - 2 protocol (One no. mandatory FO port and another FO/RJ 45 port). The main Numerical Protective Relays shall synchronise the internal clock with GPS based time synchronising equipment directly through,

i) IRIG-B or
ii) SNTP protocol or
iii) Minute/Second pulse through Binary I/Ps

All numerical relays shall be provided with 'Relay Failure Annunciation Contact'. Individual window is to be assigned in annunciator for each Numerical relay.

c) One set of Special Tools and Tackles required for maintenance purpose, including but not limited to the following items, must be supplied for each substation:

i) Test Jacks
ii) Wire Lugs
iii) Crimper
iv) Module Extractor
v) Wire Extractor
vi) Special type of Screw Driver

d) List of software for local parameterisation, settings, logic configuration, data retrieval, disturbance evaluation, downloading of storage data and no. of license (minim. 3 for new 400KV & 220KV S/Stn, & one each for other substations involved) shall be supplied by the bidder:

i) Graphical configuration tool having all the functions used in the relay and sufficient numbers different logic gates in the inbuilt library (software)
ii) Basic application licensed software for setting change, service value monitoring etc., one each for every substation where numerical relays shall have to be provided.
iii) Software for disturbance record & event logger collection and evaluation of those records in COM TRADE format.
iv) Latest IEC 61850, Ed - 2 software for inter-operability, Goose message etc.
v) Any additional software if required for remote communication and for other facilities available in the relay.

All the above tools/software should be WINDOWS 7/ WINDOWS 10 operating system compatible.

e) Interconnection architecture among the relays showing details identification of all intermediate hardware including interfacing port of the monitoring PC and other hardware

f) Connectivity architecture of Disturbance recorder evaluation station of all numerical relays like numerical distance relay, numerical differential relay etc. with time synchronisation unit.

g) Interface architecture involving multiple nos. of numerical relays of respective make, with the monitoring PC.

h) Interface architecture of the above network with existing/future network of other make numerical relays with monitoring PC, wherever applicable.

i) The bidder has to furnish the **certificate for latest IEC 61850, Edition - 2 Compliance from KEMA/CPRI**, type test certificate from any Govt. recognized Test House and performance certificate from Power Utilities in India.

j) Local area networking system: -

i) Shall be PRP and IEC 61850, Edition – 2 compliant.
ii) <u>PC configuration for both local and remote end communication</u>:
- CPU - i5 latest (3GHz Min)
- RAM – 4GB Min

- HDD 500GB, 7200 rpm
- Internal DVD combo
- 17" TFT monitor, Key board & optical mouse
- Minimum 2 nos COMPORT(RS232C)
- 8 Nos. USB Port (2 Front & 6 Rear)
- Requisite quantity of interconnecting cable
- IRIGB port if required for time synchronization with GPS clock for date and time stamping.
- Operating system – Windows 7/ WINDOWS 10
- Required software including but not limited to licensed latest version of latest Anti-Virus software, MS Office etc.

iii) External comport (RS232C) multiplier to be interfaced with the comport of PC, having minimum 8 nos interfacing port.

iv) UPS - ON LINE UPS for individual PC with minimum 15 min. battery backup.

v) Printer – Colour inkjet suitable for A3 size paper.

v) Required furniture for table top installation of PC along with Printer and two nos suitable revolving chair

vi) Other particulars, if any.

17.01 BAY CONTROL UNIT/ BAY CONTROL & PROTECTION UNIT
[The IED should be latest IEC61850, Ed - 2 compliant having rear port compatible to latest IEC 61850, Ed - 2 protocol.]

a) BCU shall be provided for supervision and control of each 132kV and above voltage class bay and BCU/ BCPU (as per the Project LOA) shall be provided for supervision and control of 66kV and below voltage class bay (a bay comprises of one circuit breaker and associated disconnector, earth switches and instrument transformer). In such case, BCPU is considered for a bay, BCPU for each bay must have six nos. Analog Current Input channels, (three nos. each for Metering core and Protection core).

b) Communication Port: BCU shall be PRP compliant for SAS with latest 61850, Ed - 2 protocol including one front port for direct access with proprietary protocol.

c) Inputs: Sufficient opto-isolated inputs. Contact bouncing in Digital inputs shall not be assumed as change of state.

d) Outputs: Sufficient potential free outputs.

e) All inputs and outputs must be user programmable. The bay control units shall be equipped with sufficient number of programmable I/O modules for interfacing with the process inputs and outputs. Extension should be possible with additional I/Os via fibre-optic communication and process bus.

f) The BCU shall meet the requirements for withstanding electromagnetic interference as per relevant standard. Failure of any single component within the equipment shall neither cause unwanted operation nor lead to a complete system breakdown.

g) The IEDs should be directly connected to the switchgear without any need for additional interposition or transducers.

h) A graphic user interface (GUI) display shall be provided in each bay control unit. The GUI display in the BCU shall display the status of the bay devices (breakers, isolators, switches etc) in real time. All alarms related to the respective bay shall be displayed in the BCU through its LED's or in its GUI display as an alarm list/scroll.

i) Analog inputs for voltage and current measurements shall be connected directly to the voltage transformers and the current transformers without intermediate transducers. The values of active power (MW), reactive power (MVAR), Frequency (Hz) and the RMS values for Voltage and Current shall be calculated.

j) Each bay control IED shall be independent from each other and its functioning shall not be affected by any fault occurring in any of the other bay control units of the station. Bay Control IEDs shall not

depend on any Numerical Protection IED or other equipment to perform control, protection, and monitoring functions and for acquisition of any bay equipment associated data.

k) Connections from BCU to switchgear should not be terminated directly on I/O boards but should be routed through Terminal Boards (TB). The bay unit shall acquire and process all data for the bay (Equipment status, fault indications, measured values, alarms etc.) and transmit these to the other devices in sub-station automation system.

l) The protection functions are independent of bay control function. The protection shall be provided by separate protection IEDs (numerical relays) and other protection devices, guided by the respective section of Relay & Protection.

m) Self-monitoring of components, modules and communication shall be incorporated to increase the availability and the reliability of the equipment and minimize maintenance.

n) Functions for BCU:

i) Control mode selection
ii) Select-before-execute principle
iii) Command supervision
iv) Interlocking and blocking
v) Double command
vi) Synchro-check, voltage selection
(BCU of Bus Coupler bay must have six numbers Analog voltage Input Channels)
vii) Run Time Command cancellation
viii) Transformer Tap Changer Control (Raise & Lower of tap) (for Power Transformer bays)
ix) Operation counters for circuit breakers
x) Breaker position indication per phase
xi) Alarm annunciation
xii) Measurement display of Vrms, Irms, HZ, W, Var for each phase and for 3phase
xiii) Local HMI (local guided, emergency mode) with Graphic display
xiv) Interface to the station HMI.
xv) Data storage for at least 200 events
xvi) Capability to implement bay level interlocks

o) Bay wise Typical I/O requirement (not exhaustive) of BCU is tabulated here under. The exact number and description of digital inputs shall be as per detailed engineering requirement because some of the I/Os may be deleted or added during detailed engineering. Apart from the above mentioned I/Os, 50% spare I/Os BCU wise for all BCUs shall be kept spare for MePTCL use in future.

Status	**DI Hard Wired**	**AI Hard Wired**	**DO**	**Remarks**
Common status for each bay				
220V DC -1 source fail	✓			
220V DC -2 source fail	✓			
220V LCC DC -1 source fail	✓			
220V LCC DC -2 source fail	✓			
Current -R Phase		✓		
Current -Y Phase		✓		
Current -B Phase		✓		
Current Neutral		✓		
CB Local Mode	✓			
CB Remote Mode	✓			
CB R-Ph Open position	✓			
CB R-Ph Close position	✓			
CB Y-Ph Open position	✓			
CB Y-Ph Close position	✓			
CB B-Ph Open position	✓			

Status	DI Hard Wired	AI Hard Wired	DO	Remarks
CB B-Ph Close position	✓			
CB Pole Discrepancy operated	✓			
CB Spring Charged	✓			
CB SF6 Gas Pr. Low Alarm	✓			
CB lockout	✓			
CB Trip Coil-1 R-Ph Faulty	✓			
CB Trip Coil-1 Y-Ph Faulty	✓			
CB Trip Coil-1 B-Ph Faulty	✓			
CB Trip Coil-2 R-Ph Faulty	✓			
CB Trip Coil-2 Y-Ph Faulty	✓			
CB Trip Coil-2 B-Ph Faulty	✓			
CB Open Order 1			✓	
CB Open Order 2			✓	
CB Close Order			✓	
Sync OK			✓	
86-A Master trip Relay Operated	✓			
86-B Master trip Relay Operated	✓			
86-A Master trip Relay Faulty	✓			
86-B Master trip Relay Faulty	✓			
Reset Order for Master-86A			✓	
Reset Order for Master-86B			✓	
96 Trip Relay Operated	✓			
96 Trip Relay Faulty	✓			
Reset Order for 96			✓	
75A OPTD	✓			
75B OPTD	✓			
GIS Auxiliary Status e.g. gas low and lockout of various gas sections, L/R/E Switch status, N/M Switch status, MCB trip condition etc.	✓			(Exact nos. of signals need to be assessed from final approved GIS LCC drawing)
33kV Indoor Switchgear Auxiliary Status e.g. Test position, Service position, Local mode, Remote mode, MCB Trip etc.	✓			(Exact nos. of signals need to be assessed from final approved Indoor Switchgear drawing)
CB Auxiliary Status (Minimum 8nos for 220kV and above, minimum 6nos for 132kV and below)	✓			For AIS CBs
Relay Faulty status	✓			Separately for each Numerical IED
PT MCB Trip	✓			Separately for each Metering and Protection circuit
Common status for each equipment				
Isolator Local Mode	✓			
Isolator Remote Mode	✓			
Isolator Open position	✓			
Isolator Close position	✓			

Status	DI Hard Wired	AI Hard Wired	DO	Remarks
Isolator Open Order			✓	
Isolator Close Order			✓	
Earth Switch Open position	✓			
Earth Switch Close position	✓			
Earth Switch Interlock permissive	✓			
SF_6 CT R-Ph Gas Low	✓			For AIS SF_6 CTs
SF_6 CT Y-Ph Gas Low	✓			
SF_6 CT B-Ph Gas Low	✓			
SF_6 CT R-Ph Gas Lockout	✓			
SF_6 CT R-Ph Gas Lockout	✓			
SF_6 CT R-Ph Gas Lockout	✓			
Additional bay specific status				
Bus Coupler bay/ Bus Transfer bay				
Bus1 Voltage- R - Y Phase		✓		
Bus1 Voltage- Y - B Phase		✓		
Bus1 Voltage- B - R Phase		✓		
Bus1 Voltage - Neutral		✓		
Bus1 Frequency		✓		
Bus2 Voltage- R - Y Phase		✓		
Bus2 Voltage- Y - B Phase		✓		
Bus2 Voltage- B - R Phase		✓		
Bus2 Voltage - Neutral		✓		
Bus2 Frequency		✓		
All Bays except Bus Coupler bay/ Bus Transfer bay				
Selected Bus R -Y Phase		✓		
Selected Bus Y - B Phase		✓		
Selected Bus B - R Phase		✓		
Selected Voltage Neutral		✓		
Line bay				
Autoreclosure - CB Healthy	✓			
CVT Voltage Phase		✓		
CVT Voltage Neutral		✓		
Transformer bay				
Other side Voltage Phase		✓		
Other side Voltage Neutral		✓		
Other side CB Open Order 1			✓	
Other side CB Open Order 2			✓	
WTI Temperature of **each** winding		✓		
OTI Temperature		✓		
OLTC Main Supply ON	✓			
OLTC Main Supply OFF	✓			
OLTC Tap Position Indication		✓		
Tap Changer Out of Step	✓			
Tap Changer in progress	✓			
Tap Changer ON LOCAL	✓			
Tap Changer ON REMOTE	✓			
Tap Changer in Independent mode	✓			
Tap Changer in master mode	✓			
Tap Changer in follower mode	✓			

Status	DI Hard Wired	AI Hard Wired	DO	Remarks
OLTC Tap Raise			✓	
OLTC Tap Lower			✓	
Cooler control Main AC Supply Fail	✓			
Cooler control S/By AC Supply Fail	✓			
Cooler Control Auto	✓			
Cooler Control Manual	✓			
Cooler control Main Oil Pump ON	✓			
Cooler control Main Oil Pump OFF	✓			
Cooler control Main Oil Pump STUCK	✓			
Cooler control S/By Oil Pump ON	✓			
Cooler control S/By Oil Pump OFF	✓			
Cooler control S/By Oil Pump STUCK	✓			
Cooler control Main Fan ON	✓			
Cooler control Main Fan OFF of **each** Fan	✓			
Cooler control S/By Fan ON	✓			
Cooler control S/By Fan OFF	✓			
Buchholz Trip	✓			
Buchholz Alarm	✓			
PRV Trip	✓			
OSR Trip	✓			
Oil Temp. High Trip	✓			
Oil Temp. High Alarm	✓			
Oil Level Low Alarm	✓			
Winding Temp. High Trip of each winding	✓			
Winding Temp. High Alarm of each winding	✓			
MOG Alarm	✓			
Diverter Tank MOG Alarm	✓			
RTCC in AUTO	✓			
RTCC in MANUAL	✓			

17.02 EVENT LOGGER:
[The IED should be latest IEC61850, Ed - 2 compliant having rear port compatible to latest IEC 61850, Ed - 2 protocol.]

a) Stand-alone type Event logger to be considered with external triggering facility. The event list shall contain events that are important for the control and monitoring of the substation.

b) The event logger shall be mounted in a separate Simplex type panel.

c) The events shall be registered in a chronological event list in which the type of event and its time of occurrence are specified. It should be possible to get the chronological event list at any time for the whole substation or sections of it. Filters for selection of a certain type or group of events shall be available. The filters shall be designed to enable viewing of events grouped per:

i) Date & Time

ii) Bay
iii) Device
iv) Functions e.g. Trips, Protection operations etc.
v) Alarm class

d) The chronological event list shall contain:
   i) Position changes of Circuit Breakers, Isolators and Earthing devices
   ii) Indication of Protective relay operations
   iii) Fault signals from the switchgear
   iv) Indication when analog measured values exceed upper and lower limits. Suitable provision shall be available to define two level of alarm on either side of the value, which shall be user defined for each measurands.
   v) Loss of communication

e) Event Logger shall fetch events from IEDs (including BCU) through soft signals. It shall also fetch events from potential free contacts through BI (5 inputs per bay + 20% spare).

f) All recorded/stored events shall be date and time tagged followed by a message describing the points which have been operated. The time resolution shall be 1 milli second.

g) Number of time tagged events in the event list should be sufficient enough to record/store all possible sorts of events of the switchyard, equipments, relays etc.

h) Event Recorder buffer memory shall be of non-volatile type and shall not require the use of batteries.

i) The printout of events shall contain at least the station & feeder identification, date and time (in hour, minute, second and millisecond), event number and event description. The event list and its print out may be available from S/S; PC and its printer to be supplied by the bidder for a complete S/Stn. The timing of each event shall be as per GPS based time synchronising equipment to be supplied by the bidder, wherever applicable & mentioned in the schedule..
   All the necessary software for the event logger function and download the event list shall be within the scope of the bid.

17.03 NUMERICAL TYPE DISTANCE PROTECTION SCHEME RELAY:
[The relay should be latest IEC61850, Ed - 2 compliant having rear port compatible to latest IEC 61850, Ed - 2 protocol.]

a) The distance protection shall be a microprocessor based high speed non-switched distance relay suitable for all phase to phase faults and phase to earth faults based on numerical principles.It shall also have necessary phase selection and direction selection facilities. The relay shall be field selectable for various permissive over reaching, permissive under reaching and for blocking/ intertripping through communication schemes.

b) The relay shall have polygonal/ quadrilateral characteristics with a facility to set resistance and reactance characteristics independently.

c) The relay shall have three forward and one reverse zone of protection for each PH-PH & PH-E fault loop with sufficient impedance or reactance and resistance reach of each zone. It shall have three zone time stepped characteristics. The second and third zone elements shall provide backup protection in the event of the carrier protection on the first zone element failing to clear the fault.

d) It shall be compatible with the PLCC equipment to be procured separately under separate contract. The distance protecting scheme shall be suitable for any length (short length also i.e. Minimum Settable value should be 1Ω Primary) of transmission line. Any limitation in this regard shall be clearly specified by the bidder.

e) The relay shall have numerical filtering and measuring techniques. It shall have individual measuring element for each phase to phase fault and each phase to earth fault. It should ensure a maximum operating time from the relay to the trip coil of CB within 40 ms for all types of faults at 50% of the set zone 1 relay reach with CVT being used on the line for a System Impedance Ratio (SIR) of 4 and

the same shall be 45millisecond for an SIR of 15. However, a relaxation of 5millisecond is allowed for the relays being used for 132 KV.

f) It shall be provided with continuous self supervision features along with self diagnostic feature, having output IRF contact for annunciation purpose.

g) Shall have memory circuits with defined characteristics in all three phases to ensure correct operation during close up three phase faults and other adverse conditions and shall operate instantaneously when circuit breaker is closed to zero volt three phase faults.

h) It shall be suitable for single and three phase tripping mode to be scheduled by MePTCL depending upon their application along with necessary trip relays.

i) The scheme for 400KV & 220 KV system shall be suitable for single phase or/and three phase Auto-reclosing. It shall have in built features of weak end in feed, switch on to fault, fuse failure supervision and instantaneous blocking of voltage dependent protection in the event of fuse failure and should remain inoperative for system earth fault, Power Swing blocking with zone selection facility for such blocking, broken conductor detection and different indications for relay monitoring operations.

j) The relay should have the facility to switch over to settable non-directional O/C during loss of voltage.

k) The relay shall have inbuilt single phase & three phase auto reclose scheme, disturbance recorder, event logger facility and additional features shall also be indicated over and above the features already specified.

l) The relay shall have online type fault location function along with built-in parallel line mutual compensation facilities having accuracy of ±3% of line length. The above accuracy should not be impaired in presence of severe CVT transient or high fault arc resistance.

m) Relay should be blocked in case of momentary dropping off of PT switching Relays to avoid maloperation, if there be any. The VTF protection should be incorporated.

n) The numerical distance relay should have in built directional sensitive earth fault element for high resistance fault.

o) The relay shall have suitable number of potential free contacts for carrier aided tripping, auto reclosing, event logger, disturbance recorder and data acquisition system.

p) The relay shall have a continuous current rating of two times of rated current, the voltage shall be capable of operation at 1.2 times rated voltage. The relay shall also be capable of carrying a high short time current without damage for a period of 1sec.

q) The relay shall have at least 16nos (for upto 132kV) and 20nos (for 220kV and above) of individually site selectable Binary Inputs and 20nos Binary Outputs (rating of Binary Input shall be 240V DC but they should not pick up at less than 150V). Latching option for B/O shall have to be provided. Output contact of the protective relay should operate single phase trip relay which will have sufficient contact to give trip command to main breaker & TBC breaker & for LBB protection initiation and other purpose.

17.03.01 AUTO-RECLOSE RELAY:

a) The scheme shall be compatible with the distance relaying scheme. It shall be suitable for single shot, single and/or three phase auto-reclosing feature. The bidder shall coordinate the auto-reclose relaying scheme with that of the circuit breaker so as to ensure satisfactory and reliable operation of the auto reclosing scheme.

b) The auto reclose relays shall have independently adjustable dead timers for single phase and three phase reclosures and an adjustable reclaim timer.

c) It shall also be possible to lock out the auto-reclosing scheme relays when the carrier protection associated with distance protection scheme is out of service or faulty.

d) It shall have auto-reclose mode selection facilities as required.

e) It shall have facilities for selecting check synchronising or dead line charging feature. It shall be possible at anytime to change the required feature as required.

f) It shall be built-in with the main distance relay.

g) The autoreclose relay along with necessary check synchronising or dead line charging facilities and other associated features shall be in built in the Main-1 & Main-2 protection. Any one shall be activated during operation and the other shall be kept as stand by. The two inbuilt autoreclose relays should be well coordinated so that autoreclose command/ definite trip command etc may be initiated from either of the two units at the discretion of MePTCL personnel. The autoreclose element of the distance relay shall also be suitable for triggering from other external protections.

h) In One and Half breaker system, while reclosing the Main breaker & Tie breaker for the Line bay, a priority shall be assigned. The Main breaker shall be allowed to reclose first and only after its successful recloser, the Tie breaker shall be allowed to reclose. If the fault persists after reclosing of the Main breaker, reclosing of the Tie breaker is blocked.

17.03.02 FAULT LOCATOR:

The distance to fault locator shall be provided for all 400KV, 220KV and 132KV lines. It shall comply with the following requirements: -

a) Microprocessor based "on-line" type.

b) suitable for breaker operating time.

c) have built in display unit.

d) the display shall be directly in kilometers without requiring any further calculations.

e) have an accuracy of 3% of the line length for which the fault locator is installed or better for all type of faults and fault levels.

f) the above accuracy should not be impaired under the following conditions:

   i) presence of remote end in feed.

   ii) Predominant d.c. component in fault current.

   iii) high fault arc resistance.

   iv) severe CVT transients.

g) have facility for remote data transmission.

h) **shall be in-built in distance relay with facility for triggering from external protection**.

i) shall have built in mutual compensation facility for using in double circuit lines and this parallel line compensation shall not be used for protection purpose.

17.03.03 DISTURBANCE RECORDER: [The DR should be latest IEC61850, Ed - 2 compliant having rear port compatible to latest IEC 61850, Ed - 2 protocol.]

a) Disturbance Recorder shall be used for 400KV, 220KV and 132KV system to record the graphic forms of instantaneous/ rms values of voltages and currents, in all phases, open delta voltage and neutral current, open or closed position of relay/ breaker contacts just prior to, during and immediately after a system disturbance to provide information necessary to ascertain the causes of disturbance and performance of relays, breakers etc. The system shall start only on the occurrence of a system abnormality.

b) The disturbance recorder shall be inbuilt function of numerical distance/ differential relay. The channels and trigger sources shall be user configurable. Program for disturbance records and event logger collection and evaluation of those records shall be provided. Also the software shall be capable of carrying out Fourier /harmonic analysis of the current and voltage waveform. Disturbance shall also be available in COMTRADE format.

c) Number of Channels required for each feeder bay :

   i) Analog channel: 8 nos.

ii) Digital channel: 32 nos.

d) The relay shall have the disturbance recording function with at least 8nos analog channels and 32nos binary channels having total recording memory of at least 15secs divided in to 8 records, each having at least a memory of 100ms for pre-fault analysis, and recording bandwidth may please be indicated. It should have on line pre and post fault disturbance recording facility. There should be provisions for interfacing all the digital channels both internally and externally.

e) The disturbance recorder shall be suitable for working with 220V DC available at the Sub-station.

f) Each Relay & Disturbance Recorder shall have the facility to synchronise the internal clock with GPS based time synchronising equipment directly through,

   a. IRIG-B or
   b. SNTP protocol or
   c. Minute/Second pulse through Binary I/Ps

g) The accuracy of the internal clock shall be indicated by the bidder. The drift is limited to ±0.5sec per day, if allowed to run without synchronisation. The recorder shall give annunciation in case of absence of synchronising pulse within a specified time.

h) Substation where time synchronisation equipment is not available, time generator of any one of the disturbance recorder can be taken as master and the time generator of other disturbance recorder and event logger in the substation shall be synchronized to follow the master.

i) The recorder shall have facility for automatic uploading of, remote data transmission. Scan rate of D R shall be at least 1KHZ per channel or better. Facility for triggering of disturbance recorder from external protection shall also be provided. Acquisition units shall acquire the fault data for the prefault and post fault period and can be transferred on demand to connected PC.

17.04 NUMERICAL TYPE LINE DIFFERENTIAL PROTECTION RELAY:
[The relay should be latest IEC61850, Ed - 2 compliant having rear port compatible to latest IEC 61850, Ed - 2 protocol.]

a) Line Differential protection relay shall have phase segregated line differential protection.

b) It shall measure Differential as well as restrain current continuously and shall display the same as measurement.

c) It shall communicate analogue as well as digital signals to remote end.

d) It shall have Line charging current compensation feature for better sensitivity.

e) Have backup built-in Distance protection functionality as specified for distance protection relay. Distance protection function can be utilized as independent or as back up of Differential protection in case of failure of remote communication.

f) It shall communicate time coordinated current signals for remote communication to execute Line differential protection algorithm accurately. Time synchronization through GPS shall also be possible.

g) Have high immunity to electrical & electromagnetic interference.

h) Have DR with 8nos analog channel & 32nos binary channel.

i) Generate GOOSE message as per latest IEC 61850, Ed - 2 standards for interlocking and also to ensure interoperability with third party relays.

j) be provided with necessary user friendly configuration tools to configure the relays and shall be compatible with SCL/SCD files generated by a third party system. GOOSE signals shall be freely configurable for any kind of signals using graphic tool/user friendly software. There shall be a facility to have latest IEC 61850, Ed - 2 protocol inbuilt without use of any external converter.

k) Have the facility of setting parameter access restriction.

l) Have self supervision with fault diagnostics.

m) Be provided with necessary WINDOWS 7/ WINDOWS 10 based support software for setting parameterisation, up & downloading data etc.

n) Have channel communication with continuous supervision facility and the facility for switching to backup protection mode in the event of communication channel failure.

o) Have cold start switching facility at every end.
p) Have phase segregated measurement and tripping facility.
q) Have a high set differential trip setting with tripping time of maximum 15ms.
r) Have a normal line differential trip time of maximum 35ms at 5 times of set value.
s) Provide high stability during external faults.

17.05 TIME SYNCHRONISATION EQUIPMENT:

The time synchronisation equipment shall receive the coordinated Universal Time (UTC) transmitted through Geo Positioning Satellite system(GPS) and synchronise equipments to Indian Standard time in a substation. It will also synchronise the substation PC through necessary software to be supplied by the bidder.

a) Time synchronising equipment shall include antenna, all special cable and processing equipments& the same shall be housed in a separate simplex type panel.
b) For all new substations, if specified in LOA, GPS shall be redundant, i.e. Two nos of Clock & Antenna should be considered.
c) It shall be compatible for synchronisation of event loggers, disturbance recorder and SCADA at a substation.
d) Equipment shall operate upto the ambient temperature of 50°C and 100% humidity.
e) Equipment shall meet the requirement of IEC 60255 for storage and operation.
f) Equipment shall have real time display in hour, minute, sec (24 hr. mode)and have a separate time display unit to be mounted on the top of the control panels or any suitable location having display size of approximately 100mm height.
g) Equipment offered shall have six output ports .Various combinations of output ports shall be selected by the customers, during detailed engineering from the following:
    i) Voltage signal: Normally 0 – 5 V with 50ms minimum pulse duration. In case any other voltage signal required it shall be decided during detailed engineering.
    ii) Potential free contact (minm. pulse duration of 50ms).
    iii) IRIG-B
    iv) RS232C
h) The synchronisation equipment shall have 2micro second accuracy. Equipment shall give real time corresponding IST (taking into consideration all factors like voltage and temperature variation, propagation and processing delays etc.).
i) The output signal of each port shall be programmable at site for either one hour, half hour, minute or second pulse, as per our requirement.
j) The equipment shall have a periodic time correction facility of one second periodicity.
k) The equipment shall be suitable to operate from 220V DC ± 10% as available at the substation.
l) The system shall be able to track the satellites to ensure no interruption of synchronisation signal.
m) Time synchronization equipment consisting of :
    i) GPS antenna,
    ii) GPS receiver with detail of output & ports,
    iii) Requisite quantity of interconnecting cable with matching connector,
    iv) Master clock with display unit, power supply unit,
    v) Battery charger if required, time synchronization panel etc.
    vi) Necessary converter arrangement for deriving Power supply DC voltage from 220V DC supply from our substation battery.
    vii) Synchronisation panel etc.
    viii) Other particulars if any.

17.06 TRANSFORMER DIFFERENTIAL RELAY:
[The relay should be latest IEC61850, Ed - 2 compliant having rear port compatible to latest IEC 61850, Ed - 2 protocol.]

a) The protection shall be provided at the HV side panel of the transformers to be protected. It shall be numerical type adjustable/variable percentage biased differential relay.

b) Necessary softwares, cables, connectors and other accessories as required in compatible with Sub-station PC shall be provided by the Tenderer as described under clause 16.07 above.

c) The relay shall be very fast in operation with an operating time less than ~~30~~ ***40*** millisec at 5 times setting.

d) The relays shall be inherently stable for external through fault conditions (up to at least 10 times of relay basic current) without affecting the speed of operation for internal faults.

e) The relay shall have built in facility of: -
   i) Ratio and phase angle correction.
   ii) Amplitude matching feature by means of reference power common to all winding.
   iii) Zero sequence filtering of relay currents depending of relevant chosen vector group.

f) The relay shall be provided with 2nd harmonic restraint (having site selectable setting facilities of 10% to 40% of I_2/I_1) or any other inrush proof feature to prevent operation due to magnetising in rush current when the transformer is charged either from HV or LV side. But this shall not affect the speed of operation for internal fault.

g) It shall be provided with 5th harmonic restraint features (having site selectable setting facilities of 10% to 40% of $I\ 5^{th}/I_{fund}$) to prevent operation due to possible over excitation of the transformer. This shall also not affect the speed of operation for internal fault.

h) It shall have ~~three instantaneous~~ site selectable high set ***differential tripping facilities*** ~~over current units~~ (8 to 15 times of relay basic current) for clearing heavy internal faults.

i) The bias-operating characteristic of differential protection device shall have at least two knees. The relay shall have adjustable bias setting range 20% to 50% and adjustable operating setting range of 10% to 50% at zero bias.

j) The relay shall be with 3-bias winding for 400/220/33KV and 220/132/33KV transformers and 2-bias winding for 220/33KV, 132/33KV and 10MVA and above 33/11KV transformers.

k) The relay shall be such that there will not be any necessity of changing the setting of the relay whenever the transformer taps are changed.

l) The relay shall be provided with GPS based time synchronized disturbance recorder with date and time tagged records with the facility of triggering from other external protective relays of the transformer as well as date & time tagged event logger function. The disturbance recorder shall be capable of recording graphic form of values of currents each phase, differential currents of each phase etc. and store them in the memory which can be downloaded both from local and remote end PC. Memory size and number of disturbances stored in the relay shall be clearly indicated in the offer.

m) The in-built disturbance recorder shall have the facility to record the following external digital signal apart from the digital signals pertaining to differential relay.
   i) REF protection operated
   ii) Over flux relay operated
   iii) Dir/ Non-Dir O/C relay operated
   iv) HV breaker status(Main & Tie)
   v) LV breaker status
   vi) Buchholz/OLTC Buchholz alarm/trip
   vii) WTI/OTI/PRD alarm/trip of transformer

n) The relay shall have the disturbance recording function with at least 12nos analog channels and 16nos digital channels having total recording memory of at least 15secs divided in to 8 records, each having at least a memory of 100ms for pre-fault analysis, and recording bandwidth may please be

indicated. It should have on line pre and post fault disturbance recording facility. There should be provisions for interfacing all the digital channels both internally and externally.

o) The relay shall have at least 8nos of individually site selectable Binary Inputs and 8nos Binary Outputs (rating of B/I shall be 240V DC but they should not pick up at less than 150V). Latching option for B/O shall have to be provided. Output contact of protective relay should operate trip relay which will have sufficient contact to give trip command to main breaker, TBC breaker & for LBB protection initiation and other purposes.

p) The relay shall have 4 - 20mA Analog Input card having sufficient provision to record the data from one no. OTI, three nos. WTI and Tap Position Indicator.
Necessary hardware and software for downloading the data captured by disturbance recorder to the personal computer available in the substation shall be included in the scope.

17.07 RESTRICTED EARTH FAULT PROTECTION:

The Relay shall comply with the following requirements: -

a) stand-alone Numerical type. ***Shall be current or voltage operated and high impedance type.***
b) shall have three nos. voltage coils to identify the faulty phase.
h) tuned to the system frequency.
e) have suitable nonlinear resistor to limit the peak voltage.
f) operating time shall be less than ~~20~~ ***45*** ms.
g) have suitable stabilizing resistor to prevent mal-operation during external faults.

17.08 CIRCULATING CURRENT PROTECTION:

The protection shall be responsive for both phase and earth fault of the transformer and reactor winding. The relay shall comply with the following requirements: -

a) stand-alone Numerical type. ***Shall be current or voltage operated and high impedance type.***
b) shall have three nos. voltage coils to identify the faulty phase.
c) tuned to the system frequency.
d) have suitable nonlinear resistor to limit the pick voltage.
e) operating time shall be less than ~~20~~ ***45*** msec.
f) have suitable stabilizing resistor (in each phase) to prevent mal-operation during external faults.

17.09 OVER FLUXING PROTECTION:

The relay shall comply with the following requirements: -

a) Stand alone Numerical type.
b) The relay shall operate on the principle voltage to frequency ratio.
c) It shall have characteristics compatible with transformer over fluxing withstand capability.
d) Input shall be 110V, 50Hz, Auxiliary Volt 220V DC ± 20%
e) Over Flux relay characteristics should be suitable for: -
   i) 110% continuous
   ii) 125% for 1min.
   iii) 140% for 5sec.
f) Alarm : - Settable between 100% - 130% with Definite Time delay, settable from 0.5 – 30 sec.
g) Drop Off/ Pick Up ratio should not be less than 98%.
h) The relay shall have the disturbance recording function with at least 4nos analog channels and 8nos digital channels.

17.10 OVER LOAD PROTECTION:

This protection shall be used for 400/220/33kV & 220/132/33kV Auto-transformer and shall be located at HV side protection panel of respective transformer. The relay shall comply with the following requirements: -

a) definite time, single pole type.
b) have a variable and continuously adjustable current setting range of 50% to 200% of rated current and variable time setting 2.5 to 25sec. of the timer unit.
c) included hand reset flag indicator.
d) the relay shall provide alarm only.
e) have a drop off/pick up ratio greater than 95%.
f) May be in built feature of numerical differential relay.

17.11 OVER VOLTAGE PROTECTION:

This protection shall be used for 400kV Feeder. The relay shall comply with the following requirements: -

a) stand-alone type & connected to Line CVT.
b) monitor all three phases.
c) be connected between Phase to Phase in Delta configuration.
d) have two stages.
e) have an adjustable setting range of 100 - 170% of rated voltage with an adjustable time delay range of 1 to 60secs for the first stage .
f) have an adjustable setting range of 100 – 170% of rated voltage with a delay of 100 – 200msec for the second stage .
g) have power frequency filters.
h) have a drop off to pickup ratio greater than 99%.
i) provide separate output contact for each 'Phase' and stage for breaker trip relays, event logger and other scheme requirement.

17.12 NUMERICAL DIRECTIONAL/NON-DIRECTIONAL OVER CURRENT & EARTH FAULT PROTECTION:

The relay shall comply with the following requirements: -

a) Minimum two characteristics, one IDMT of 3sec and the other one of definite time characteristic with instantaneous high set and the same should be site selectable.
b) Wide range of time and current setting in very small steps without sacrificing the relay characteristics.
c) There should be provision for configuring the output contacts and LEDs as latched or unlatched individually. Reset of the outputs and LEDs shall be possible from a logic input and the front panel operator interface.
d) Continuous self supervision along with self diagnostic feature for faults within the relay and the relay should have potential free 'change over' contact for annunciation in the event of internal failure.
e) DC auxiliary voltage – 220V±20%, 110v. ±20%
f) Rated current – 1A.
g) Frequency – 50Hz.
h) Digital input voltage range shall be identical to the DC voltage range.
i) Thermal withstand capability – 100A for 1Sec/ 4A continuous.
j) Output contacts having sufficient current rating to directly energize trip coil of circuit breaker.
k) LED indication facility for visual annunciation of different type of faults including phase identification. Fault indication should be displayed in the stand-by screen.
l) Individually site selectable both binary Output & Input and latching option for binary Output.
m) Relay should show fault current with time stamping.

n) The relay shall have more than one selectable setting group.
o) The setting group can be changed by binary inputs.
p) The relay shall have a non volatile memory for -
   i) Event recorder - shall have the facility of recording up to 75 events with time stamping.
   ii) Setting values.
   iii) Disturbance recorder data - Recorded data of 5 last events with time stamp. The disturbance recording function is triggered either by any of programmed threshold or by an external input. All logic and analog information can be transferred using communication port to an external data analyzer. Current waveforms shall be captured.
q) Fault records - At least five nos fault records shall be available with the following indications:
   i) Fault indication.
   ii) Current values.
   iii) Tripping time.
r) Measurement -Instantaneous three phase current values and residual current value. All the measured and derived values can be displayed on the front panel LCD.
s) No of output contact required – 8 nos
   No. of digital input required – 8 nos
t) The numerical directional shall have built in feature for derivation of zero sequence voltage internally. The MTA of numerical directional relay shall be 45ºlag for earth fault and 45ºlead for over current. Any extra feature like time synchronization, LAN compatibility with other numerical relays shall be mentioned specifically.

17.13 CURRENT UNBALANCE PROTECTION:

This protection shall be used for 33kV Capacitor bank. The relay shall comply with the following requirements: -

a) Shall be stand-alone Numerical type.
b) Shall have SEF element suitable for capacitor bank (double star) unbalance current protection.
c) SEF (unbalance current) element should be settable up to 2 times rated current. This element will be fed from neutral CT of low primary current rating (eg. 2A).
d) SEF (unbalance current) element shall have minimum 2 stages with definite time characteristics.
e) Shall have three phase current based overload protection element. This element shall be used for overload protection of capacitor bank due to over voltage as well as harmonic content of current.
f) Over load protection element should operate considering the current, without suppression of harmonics.
g) Characteristics of over load element shall be definite time. Setting range should cover up to 2 times relay rated current.
h) Shall have built-in three-phase under-current element (fed from phase current) with definite time characteristics to prevent closing operation of circuit breaker, immediately after tripping, to allow discharging of capacitor bank. Time setting range of this element shall be minimum 10 minutes.

17.14 OVER VOLTAGE AND UNDER VOLTAGE PROTECTION:

This protection shall be used for 33kV Capacitor bank. The relay shall comply with the following requirements: -

a) Shall be stand-alone Numerical type.
b) Shall be connected between Phase to Phase in Delta configuration and monitor all three phases.
c) Both the under-voltage element and the over-voltage element shall have two stages.
d) Over voltage element shall have an adjustable setting range of 100 - 170% of rated voltage with an adjustable time delay range of 0 to 60secs for both stages.

e) Under voltage element shall have an adjustable setting range of 10 - 90% of rated voltage with an adjustable time delay range of 0 to 60secs for both stages.
f) Shall have power frequency filters.
g) Shall have a drop off to pick up ratio greater than 99%.

17.15 AUXILIARY RELAY FOR INTERNAL TROUBLE:

DC voltage operated auxiliary relays provided with mechanically operated hand reset indicator and sufficient number of hand-reset contacts (Minimum 3 NO contact per coil) shall be provided for protection and supervision against internal troubles/faults of GIS bay, Transformer, Reactor, Circuit Breaker and CT. Number of element and number of relays shall be as per requirement of individual equipment.

17.16 MASTER TRIP RELAY:

Master trip relay shall be provided to cause tripping of all the associated breakers. This relay shall also be provided in other bays for closing lock out of breaker. Master trip relay coil supervision shall be provided. The relay shall comply with the following requirements: -

a) Shall have fast operating attracted armature multi-contact relay coil assembly, operating time should be less than 15ms.
b) Shall be provided with electrical reset as well as hand reset arrangement.
c) Shall have cut-off contact with relay operating coil.
d) Shall have high burden and high degree of mechanical stability.

17.17 DC SUPPLY SUPERVISION RELAY:

The relay shall monitor D.C. Supply continuously, as specified in resp. Clause. The de-energization of this relay will indicate the DC Supply failure. Auxiliary supply for the relay is 220V DC. The relay shall have a time delay on drop off of not less than 100 milli second. The relay shall be provided with operation indicators (Reverse flag) self reset. Sufficient number of contacts potential free may be provided. Separate relays for dual source are to be provided.

17.18 LOCAL BREAKER BACK UP PROTECTION:

The above protection shall be stand alone type or built in function of bus bar protection scheme and shall be provided for 400KV, 220KV & 132kV bays. The protection scheme shall be so designed that if any circuit breaker fails to trip in the event of a fault, then after a short time delay all the adjacent circuit breakers connected in the same bus will be tripped. The circuit breaker failure shall also block auto-reclosing scheme. The scheme shall be complete with timer and auxiliary relays as necessary including remote end tripping facility. The relay shall comply with the following requirements: -

a) be triple pole type.
b) havea operating time less than 15millisecond.
c) have an resetting time less than 15millisecond.
d) have three over current element with facility for phase wise initiation.
e) have a current setting range 20 to 320% of rated current for over current.
f) have a continuous thermal withstand of two times rated current irrespective of the setting.
g) have timer suitable for sub-station D.C. with a continuously adjustable setting range of 0.1 to 1sec.
h) be of solid state/ numerical type.
i) trip and lock out all the local breakers. Simultaneously direct trip signal shall be sent to remote end circuit breakers (through both channels in case of 400KV system) and lock out its auto-reclosing feature.
j) have necessary auxiliary relays to make a comprehensive scheme.

k) Trip all the breakers on the particular bus in a One & Half breaker system, when any bus breaker fails to trip in faulty condition. However, when a Tie Breaker fails to open, the LBB relay shall trip the adjacent bus breakers as well as both the breakers at the remote end of the bays.

l) LBB for Tie breaker shall be standalone type.

17.19 TRIP CIRCUIT SUPERVISION RELAYS:

a) DC supply to each trip coil of the circuit breakers shall be supervised with an independent trip circuit supervision relay. These relays shall be mounted in the relay panel associated with the circuit breaker. No chattering of the relay is acceptable.

b) The relays shall supervise the healthiness of trip circuit continuously (Both pre-closing and post-closing conditions of the circuit breakers). Healthiness of each phase trip coil and associated circuits of the circuit breaker during "ON and OFF" conditions shall be monitored by the relays and give an alarm for the (i) loss of D.C. supply or (ii) for faults in the trip coil or for faults in the trip circuit leads or for faults in the breaker auxiliary contacts or faults in the supervisory relay itself.

c) The relay shall have adequate contacts for providing connection to alarm and event logger, self reset. The relay shall have a delay in drop off at least 200ms to avoid a false alarm during a normal tripping operation. The short circuiting of any series resistance provided in this relay or short circuiting the coil of the relay should not energize the trip coil of the breaker.

17.20 NUMERICAL BUS BAR PROTECTION

[The relay should be latest IEC61850, Ed - 2 compliant having rear port compatible to latest IEC 61850, Ed - 2 protocol.]

a) The bus bar protection relay should support various bus architectures selectable by means of the relay configuration (Single bus bar, Double bus bar, Breaker and a half bus bar, two section bus bar with a bus tie, Double bus bar with transfer bus and tie breaker) for its bus bar protection. Bus Bar protection scheme should operate selectively for each bus bar.

b) The relay must have rejection and shall not operate on second and third harmonics. Second harmonic rejection ratio 2:1 minimum, third harmonic rejection ratio 40 : 1 minimum.

c) The relay shall incorporate dynamic bus replica and provide necessary end zone/ blind zone fault protection depending on the bus bar protection CT's location.

d) The relay should have provision to configure split zone protection using section isolator status, if the system requires. Implementation shall be MePTCL discretion.

e) Facility to monitor the bus differential currents and bus restraint current for each zones shall be supported in the relay display as well as through configuration tools.

f) Built-in Local Breaker Backup protection feature as a part of bus bar protection scheme shall also be acceptable.

Bus bar protection scheme: -

a) shall be phase segregated and triple pole type with separate relay for each phase and provide independent zone of protection. If bus section is provided, then each side of the bus section shall have separate set of bus bar protection scheme.

b) The bus section breaker and bus coupler breakers shall be covered by overlapping bus bar protection scheme of respective buses.

c) incorporate check zone feature for each phase and clear zone indication. The check zone shall be without any switching. Also check zone shall not over stabilize during internal fault due to unequal source & load distribution.

d) shall include one overall check zone protection in addition to single/multiple zones specified.

e) be transient free in operation

f) Shall have maximum operating time up to trip impulse to trip relay for all types of faults of 20milli seconds at 5 times setting value.

g) The bus bar protection of respective bus sections shall trip respective set of bus bar lockout relays and shall initiate BF of respective CB. The bus bar protection scheme shall include individual high speed hand reset tripping relays alongwith stand-alone supervision relay for each bay.

h) No inter-trip initiation is permitted between 86 circuit and 96 circuit. Sufficient contacts are to be considered for 96 relays of Transformer bays so that individual contact of 96 relay can be assigned for trip initiation to the Trip coil – 1, Trip coil – 2 of the other side Main Circuit Breaker as well as Transfer bay Circuit Breaker (if available).

i) not give false operation during normal load flow in bus bars. not cause tripping for the differential current below the load current of heaviest loaded feeder. Bidder shall submit application check for the same.

j) Shall incorporate continuous supervision for CT secondary against any possible open circuit and if it occurs, shall render the relevant zone of protection inoperative and initiate an alarm

k) include continuous D.C. supplies supervision.

l) include protection 'IN/OUT' switch for each zone

m) The scheme should be equipped completely for supporting **four** numbers spare circuits (having maximum no. BI and BO, which is used for a particular bay in present scope) in addition to the circuits for feeders/ bays in the single line diagram. Central unit shall be compatible for minimum 24 bays.

However for extension of bus bar protection scheme (if specified in BPS) in existing substations, scope shall be limited to the bay or breakers covered under this specification. Suitable panels to mount these are also included in the scope of the work.

n) At existing substations, Bus-bar protection scheme with independent zones for each bus, will be available. All necessary co-ordination for 'AC' and 'DC' interconnections between existing schemes (Panels) and the bays proposed under the scope of this contract shall be fully covered by the bidder. Any auxiliary relay, trip relay, flag relay and multi tap auxiliary CTs (in case of biased differential protection) required to facilitate the operation of the bays covered under this contract shall be fully covered in the scope of the bidder.

17.20. For 400KV substation:

01

a) For 400KV bus bar protection two redundant full scheme of Bus Bar protection incorporating individual buses and transfer bus is to be provided. The tripping logic should be 'AND Logic' in case when both the bus bar protection relay is available. In case of non availability of one bus bar relay, the tripping logic will be based on available relay.

b) The Central Processing Unit of bus bar protection & Bay Unit of numerical bus bar protection scheme shall be housed in a separate set of simplex type panel along with equipment/relays.

c) One Bus bar protection scheme shall be provided for each main and transfer bus for 220KV and 132 KV voltage levels.

d) Bus Bar protection scheme shall give hundred percent security up to 50KA for fault level for 400KV

17.20. For 220KV AND 132KV substation:

02

a) Bus bar protection scheme shall be provided for both 220KV and 132kV system.

b) Bus bar protection relaying scheme shall be provided in a separate simplex type panel with all bus differential relays and trip relays etc. as required considering future bays.

c) Bus Bar protection scheme shall give hundred percent security up to 40 KA fault level for 220KV.

17.21 TEE DIFFERENTIAL PROTECTION

Duplicated differential protection scheme namely Tee Differential protection shall be provided for One and Half Breaker system. This scheme shall protect the circuit between the Main breaker & the tie breaker. Two separate differential relays on different hardware platform shall be used for Main Iand Main II protection.

17.22 STUB PROTECTION

Stub protection scheme shall be applicable for one and half breaker system. This protection shall protect the part of one & half breaker system, not covered by distance protection.
Stub protection scheme shall be: -

i) active only when Line isolator is open & there is no voltage from CVT for distance protection relay.
ii) the inbuilt function of the main Numerical Protection relay.
iii) Able to sense the fault through an overcurrent sensing element & trip bus breaker under fault condition.

17.23 CONFIGURATION AND MONITORING TOOLS FOR ALL NUMERICAL RELAYS:

The manufacturer/bidder has to provide configuration and monitoring tool for all type of numerical relays used for a particular sub-station without any price implication.

a) PC hook-up cable for direct communication in sufficient quantity for each substation.
b) Graphical configuration tool having all the functions used in the relay and sufficient nos. of different logic gates in the in built library (software).
c) Basic application software for setting change, service value monitoring etc.
d) Programme for disturbance record collection and evaluation of those records.
e) Any additional software, if required, for remote communication and for other facilities available in the relay.

All the above tools/software should be WINDOWS 7/ WINDOWS 10 Operating system compatible.

18.0 PROTECTION PHILOSOPHY:

The bidder has to design the protection scheme for lines, transformers, Bus coupler, Bus Transfer bay of 400KV, 220KV, 132KV and 33KV system as applicable depending upon the substation layout arrangement and the schemes are to be submitted along with their offers for acceptance of the same by MePTCL. All the protective relays etc. of each bay shall be mounted in the respective bay panel. Similarly for 400/220/33KV, 220/132KV and 132/33KV transformer protection, relay of each system voltage shall be located in the respective panel. However, the protection schemes shall be generally based on the requirement listed below:

18.01 LINE PROTECTION:

a) Main – 1 distance protection by microprocessor based numerical distance relaying scheme with carrier aided distance protection scheme.
b) Main – 2 distance protection by microprocessor based numerical distance relaying scheme but of a different make with carrier aided distance protection scheme (For 400kV, 220kV & 132kV).
c) For 220kV & 132kV Line, where the line length is less than 3km, and for 220kV & 132kV cable line and if specifically asked for in Tender LOA, Main – 1 and Main – 2 Line Differential protection scheme numerical relays of different make are to be considered. Both relays should work in same wavelength.
d) Auto reclosing, fault locator and disturbance recorder scheme, event logger etc. shall be built in with Distance relay/ Line Differential relay as specified in resp. Clause.

e) Local breaker back up protection scheme.
f) Direct tripping command from remote end through carrier channel.
g) Line CVT operated two stage over voltage protection (For 400kV only).

18.02 PROTECTION OF AUTO TRANSFORMER:

h) Percentage biased differential protection (three winding).
i) Circulating current protection responsive to both phase faults and earth faults. (For 315MVA, 400 / 220 / 33 KV AUTO TRANSFORMER only)
j) Restricted earth fault protection. (For 220/132/33KV AUTO TRANSFORMER only)
k) Numerical Directional Back up protection having voltage polarised three element IDMT overcurrent with directional high set instantaneous element and single element earth fault protection with necessary P.T. fuse failure monitoring scheme for both at HV side and MV side.
l) Over load protection alarm on HV side.
m) Transformer over flux protection on HV side & MV side.
n) Flag relays for transformer mounted protection like buchholtz, winding temperature, oil temperature, pressure relay device etc.
o) Local breaker back up protection at HV side & MV side.
p) Numerical stand-alone type neutral displacement relay with stage operation for tertiary winding protection either by external open delta connection or by internally derived open delta voltage in relay. PT connection will be via 2A MCB.
q) Numerical Non-directional, IDMT, three over current protection with high set instantaneous unit (for loaded tertiary of 220/132/33KV AUTO TRANSFORMER only).

18.03 400KV BUS REACTOR PROTECTION:

a) Differential protection.
b) Restricted earth fault protection.
c) Back up single step distance protection.
d) Reactor internal trouble i.e., buchholz, winding temperature etc. protection.
e) Local breaker back up protection.

18.04 132/33 KV STAR-DELTA TRANSFORMER PROTECTION:

a) Percentage biased differential protection (Two winding).
b) Restricted earth fault protection both at HV and LV side.
c) Numerical Directional Back up protection having voltage polarised three element IDMT overcurrent with directional high set instantaneous element and single element earth fault protection with necessary P.T. fuse failure monitoring scheme for both at HV side and LV side.
   i) One no. separate Numerical relay shall be considered for HV side.
   ii) For LV side, if BCPU is considered in the respective Tender LOA, then Over current protection feature of BCPU shall be used for LV side. Else One no. separate Numerical relay shall be considered for LV side.
   iii) The Earth Fault coil of the LV side Numerical relay shall be utilized as Overall REF protection using Earthing Transformer Neutral CT and Bay CT of 33kV side of the Power Transformer. For this Overall REF protection, separate suitable nonlinear resistor to limit the pick voltage and stabilizing resistor to prevent mal-operation during external faults shall be considered.
d) Stand-alone Numerical type relay with stage operation (setting range of 10-40%) to be considered for Earthing transformer neutral C.T. operated definite time earth fault protection. System Earth Fault Relay shall have three nos. voltage coils to identify the faulty phase.
   The earthing transformer location shall be as per the project SLD.
e) System Earth Fault protection scheme shall be achieved by five-position selector switch.

The Five-position Selector Switch is to be wired assuming a 33kV system having three Bus Section and two Bus Section Circuit Breakers. Each Bus Section shall have one Power Transformer and one Earthing Transformer, i.e. total three nos Power Transformers and three nos Earthing Transformers shall be present in the complete 33kV system.

f) Flag relays for both Power Transformer and Earthing Transformer mounted protection like buchholtz, winding temperature, oil temperature, pressure relay device etc.

g) This earth fault relay will trip HV breaker/breakers after a preset time delay. The switches shall be having sufficient number of contacts. The trip relays shall have sufficient number of contacts for extending the trip pulse to other 33KV feeders connected with generating stations.

h) Trip transfer scheme for both HV & LV side shall be provided with two separate trip transfer switch.

18.08 BUS COUPLER BAY PROTECTION:

The protection scheme of 400kV, 220kV and 132kV bus coupler bay shall be as follows: -

a) Over Current & Earth Fault Protection with Check-Sync facility.

b) Local breaker back up protection.

The protection scheme of 33kV bus coupler bay (in case of Indoor Switchgear) shall be as follows: -

a) Non-directional, IDMT, three over current protection with high set instantaneous unit.

b) Non-directional, definite time earth fault protection.

c) One common under frequency relay of setting range 45 to 55 HZ in adjustable steps and with timer relay of 0 to 20 second adjustable setting range with sufficient number of contacts shall be provided from tripping of all 33 KV outgoing breakers.

18.09 TRANSFER BUS BAY PROTECTION:

The breaker shall be used for transfer of any circuit (except the 33KV Shunt Capacitor bay) through transfer bus in case of necessity. During the period of transfer the line side CT operated protection of transferred circuit will trip the transfer bus breaker in place of respective bay circuit breaker through trip transfer switch. Normally, the protection scheme provided in transfer bus bay, except the LBB protection, shall be kept inoperative with the help of protection IN/ OUT selector switch (for 400 & 220kV) or 3-position make before break type protection selector switch having selection for Feeder, transformer and off position (for 132kV & 33kV). However, its own protection shall be used when there is trouble in the protection system of transferred circuit.

The protection scheme of 400kV, 220kV and 132kV transfer bus bay shall be as follows: -

a) Single distance protection scheme for transferred feeder protection. The transfer bay numerical distance relay should be identical to the Distance relays used in the feeder protection for easy replacement of the same in future, if required.

b) Numerical Directional Back up protection having voltage polarised three element IDMT overcurrent with directional high set instantaneous element and single element earth fault protection with necessary P.T. fuse failure monitoring scheme (For 132kV Feeder bay only).

c) Numerical Non-directional, IDMT, three over current and one earth fault protection for 132/33 KV transformer protection. The relay plug setting should be judged properly for protecting rated to 100% loading (For 132kV side bay of 132/33kV Transformer only).

d) Local breaker back up protection.

The protection scheme for the 33kV transfer bus bay shall be -

d) Non-directional, IDMT, three over current protection with high set instantaneous unit with protection selector switch.

e) Non-directional, definite time earth fault protection with protection selector switch.

f) One common under frequency relay of setting range 45 to 55 HZ in adjustable steps and with timer relay of 0 to 20 second adjustable setting range with sufficient number of contacts shall be provided from tripping of all 33 KV outgoing breakers.

18.10 33KV FEEDER PROTECTION:

a) If BCPU is considered in the respective Tender LOA, then Over current protection feature of BCPU shall be used. Else One no. Numerical relay shall be considered for Directional, IDMT, three over current protection with high set instantaneous unit.
b) Directional, definite time sensitive earth fault protection.
c) Under frequency relay operated CB tripping scheme.
d) One no. 96 relay alongwith 95/96 relay for Phase Overcurrent LBB protection.

18.11 33/11KV TRANSFORMER PROTECTION (DELTA-STAR):

a) Percentage bias differential protection (Two winding) for 10MVA and above 33/11KV transformers.
b) For Transformer rating less than 10MVA, space to be kept for installation of Numerical Differential relay in future.
c) Non-directional, IDMT, three over current protection with high set instantaneous unit at HV side.
d) Restricted Earth fault protection for HV & LV.
e) Flag relays for transformer mounted protection like buchholtz, winding temperature, oil temperature, pressure relay device etc.
f) Under frequency relay operated CB tripping scheme.
g) One no. 96 relay alongwith 95/96 relay for Phase Overcurrent LBB protection.

18.12 33kV SHUNT CAPACITOR BANK PROTECTION:

a) Non directional IDMTL Overcurrent & Earth Fault protection relay.
b) Unbalance Protection scheme relays for double star connected capacitor bank with floating neutral. The relay used shall detect two current levels, one for alarm & another for tripping. It shall be able to provide alarm in the event of failure of one or two units before tripping.
c) Over voltage & Undervoltage protective relay with both Definite time and Inverse time characteristics as well as provision for Line and Phase voltage setting.
d) CB closing shall have interlock with a timer as per Capacitor discharge time so that the CB cannot be closed within the capacitor discharging time.
e) One no. 96 relay alongwith 95/96 relay for Phase Overcurrent LBB protection.

18.13 BUS CONFIGURATION FOR 400KV, 220KV, 132KV AND 33KV SYSTEM OF DIFFERENT S/S.:

Bus configuration for various voltage class shall be as per respective Tender document.

18.14 Approximate route length of different circuits of 400KV, 220KV and 132KV system controlled by different feeder bays are as stated in GCC under "Scope of work".

19.01 SYNCHRONISATION:

For sub-station equipped with sub-station Automation system, the requirement of synchronisation is specified in the respective section under Sub-station Automation System and the same shall prevail. For other sub-station which is not equipped with Sub-sub-station automation system following shall be applicable as per requirement.

In such cases, where Trolley cannot be used for Synchronisation, Synchro check function should be part of the main relay (if available) else stand-alone Synchro-check relay is to be considered. The

relays equipped with synchronism and energizing check shall comply with the requirements as mentioned below:

i) Settable voltage, phase angle, and frequency difference.
ii) Energizing for dead line - live bus, live line - dead bus or dead line– dead bus with no synchro-check function
iii) Synchronising between live line and live bus with synchro-check function

One synchronising panel mounted on a movable trolley shall be provided for use in **400KV system** and **another one** for both in **220KV & 132KV system**, wherever mentioned in the schedule. For 400KV synchronization shall be achieved by comparing between phase to phase voltage and for 220KV & 132KV, synchronization shall be achieved by comparing between phase to neutral voltage.
At existing sub-stations, the synchronising scheme shall be engineered to be compatible with the existing synchronising scheme and synchronising socket/switch on the panel.

The trolley shall be equipped with –

a) Two Analog voltmeters for running & incoming, each having scale suitable for 400KV, 220KV & 132KV system and also suitable for operation with CVT/ EMVT secondary voltage of 110v phase to phase.
b) Two Analog frequency meters each having scale range 45 to 55Hz, indicating type.
c) One suitable synchroscope with cut – off switch.
d) One suitable auxiliary voltage transformer for synchronising condition.
e) One synchronising bypass switch with necessary under voltage relaying scheme of running system and incoming system to check inadvertent circuit breaker closing under synchronising bypass condition.
f) One check synchronising relay with necessary auxiliary equipment which shall permit the circuit breaker to close after checking the requirement of synchronising of incoming and running supply.
g) One guard relay to prevent the closing attempt by means of synchronising check relay when control switch is kept in close position long before the two systems are in synchronism.
h) Two synchronizing lamps of white colour.
i) One green LED indicating lamp to indicate check synchronism in limit.
j) One red LED indicating lamp to indicate check synchronism by pass.
k) Any other equipment required to render satisfactory operation of synchronism.

19.02 MANDATORY SPARES:

Shall be supplied as per schedule.

20.00 SCHEDULE OF EQUIPMENT OF DIFFERENT PANELS:

Though the Bidder has to design the Control Panel and Protection Schemes for all the bays, which are within the scope of the tender, as per the protection philosophy specified in the specification under Cl. No. 18.00., the lists of equipment is given below **for general guidance of the bidder**. The actual requirement for different substations is to be assessed by the bidder and to be quoted accordingly for successful operation of the control and protection scheme. **Same shall be finalized during detailed engineering and if any additional equipment be found necessary for proper operation, match and coordination with the existing panel, the same shall also be arranged by the bidder without any extra price.**

20.01 CONTROL PANEL EQUIPMENTS FOR DIFFERENT VOLTAGE CLASS:

Name of Equipment	Quantity	Name of Panel	Remarks
Digital Ammeter	3nos	Each bay	
Digital Wattmeter with Transducer	1set	Each Line bay, Trafo bay, Tie bay (in case of One & Half Breaker system), Bus Transfer bay, Bus Coupler bay	
Digital Varmeter with Transducer	1set	Each Line bay, Trafo bay, Tie bay (in case of One & Half Breaker system), Bus Reactor bay, Capacitor bank bay, Bus Transfer bay, Bus Coupler bay	
Digital Voltmeter	2no	Each Bus Coupler bay (in case of 2M1T system or 2M system) and in any one bay (in case of One & Half Breaker system)	If Two nos PTs are used in 1M system with Bus Section CB, two separate voltmeters are to be considered.
Digital Voltmeter Selector switch (8 – position)	2no	Each Bus Coupler bay (in case of 2M1T system or 2M system) and in any one bay (in case of One & Half Breaker system)	If Two nos PTs are used in 1M system with Bus Section CB, two separate voltmeter selector switches are to be considered.
Digital Voltmeter	1no	Each Line bay (400kV only) and Bus Transfer bay (in case of 1M1T system) and Capacitor Bank bay	
Digital Voltmeter Selector switch (8 – position)	1no	Each Line bay (400kV only) and Bus Transfer bay (in case of 1M1T system) and Capacitor Bank bay	
Power Factor Meter	1no	Capacitor Bank bay	
Digital Frequency Meter	2no	Each Bus Coupler bay (in case of 2M1T system or 2M system) and in any one bay (in case of One & Half Breaker system)	
Digital Frequency Meter	1no	Each Bus Transfer bay (in case of 1M1T system)	
Recording Voltmeter (Digital)	2no	Each Bus Coupler bay (in case of 2M1T system or 2M system) and in any one bay (in case of One & Half Breaker system) (400kV only)	
Recording Frequency meter (Digital)	2no	Each Bus Coupler bay (in case of 2M1T system or 2M system) and in any one bay (in case of One & Half Breaker system)	

		(400kV only)	
Multi-function Meter	1no	Each bay	To be considered only in SAS substations having only Relay panel, no Control panel.
CB Control Switch (Discrepancy type)	1no	For each Circuit Breaker (132kV & above)	
CB Control Switch (Pistol grip type)	1no	For each Circuit Breaker (33kV & below)	
Control Switch (Pistol grip type)	1no	For each Isolator & Earth Switch	
Trip Transfer Switch	1no	Each Line bay, Trafo bay, Bus Reactor bay (in case of 2M1T system or 1M1T system)	
DC supply selector switch (Supply 1-Independent-Supply 2)	1no	Each bay (132kV & above)	
Bus VT selector switch (Bus VT 1 / Bus VT 2)		~~Bus Coupler~~ ***Each*** bay (in case of 2M1T***/ 2M/ 1M1T*** system ~~or 2M system~~) of 132kV class and above AND Each 33kV bay	Each bay of 132kV class and above, if Two nos PTs are used in 1M system with Bus Section CB.
Discrepancy Switch Steady Lamp cut-off Switch	1no	Each Bus Coupler bay (in case of 2M1T system or 2M system), Each Bus Transfer bay (in case of 1M1T system) and in any one bay (in case of One & Half Breaker system)	
Under Frequency protection ON-OFF Selector Switch	1no.	For each 33kV panel (Feeder bay and 33/11kV Trafo bay)	
Back-up Earth Fault protection ON-OFF Selector switch	1no.	For each 33kV panel (Feeder bay and 33/11kV Trafo bay)	
Earthing Transformer Selection Switch (5-position)	1no.	For each 33kV panel (33kV side bay of 132/33kV Trafo & 220/33kV Trafo)	
LED Semaphore	1no	For each Isolator & Earth Switch	
LED Semaphore	1no	For each Circuit Breaker (33kV & below)	
Amber LED Indicating Lamp	As Reqd.	For DC Fail indication	
White LED Indicating Lamp	As Reqd. (One no for each pole for Single pole operated CBs)	For CB Trip coil healthiness indication	
Blue LED Indicating Lamp	As Reqd.	For CB Spring Charged indication	
Phase Healthy Indicating	6nos	Each Bus Coupler bay (in case	

Lamp		of 2M1T system or 2M system)	
Phase Healthy Indicating Lamp	3nos	Each Bus Transfer bay (in case of 1M1T system)	
Yellow LED Indicating Lamp	As Reqd	For CB Auto Trip indication (33kV & below)	
Red LED Indicating Lamp	As Reqd	For CB ON indication	
Green LED Indicating Lamp	As Reqd	For CB OFF indication	
Annunciation windows wih associated lamps etc.	As per scheme requirement (Minimum 20nos.)	For each Control panel	
Push button for Annunciator Alarm accept/ reset/ test	3nos	For each Control panel	
AC buzzer for DC fail alarm and associated relays for Annunciation scheme	1set	Each Bus Coupler bay (in case of 2M1T system or 2M system) and Each Bus Transfer bay (in case of 1M1T system)	
DC bell for trip alarm, DC hooter for non-trip alarm, associated relays for Annunciation scheme	1set	For each Control panel	
Push Button for Protection DC Fail check, CB Spring Charge check, CB Trip Coil Healthy check, DC Fail Alarm accept, AC Fail check etc.	As Reqd	For each Control panel	
One no. push button each for Main DC Fail Test, Annun DC Fail Test, Main DC/ Annun DC Fail Accept, AC Fail Test and one no. LED indicating lamp (amber) each for Main DC Fail, Annun DC Fail visual indication.	1set	Each Bus Coupler bay (in case of 2M1T system or 2M system) and Each Bus Transfer bay (in case of 1M1T system)	
Synchronising Socket and Synchronising selector Switch	1no each	Each Line bay, Trafo bay, Bus Coupler bay, Bus Transfer bay, Tie bay (in case of One & Half Breaker system),	Not required for 132kV side of 132/33kV Trafo
RWTI with Selector switch	1no each	Each Bus Reactor bay	
ROTI	1no	Each Bus Reactor bay	
TTB with wiring for intelligent electronic computer compatible energy meter (0.2 class)	1no	Each Line bay, Trafo bay, Tie bay (in case of One & Half Breaker system)	
Common items e.g. Mimic;	As Reqd	For each panel	

Circuit Label; Label indicating Manufacturer's Name, P.O. details, Drg. Ref. nos etc.; internally mounted equipments like Heater with Switch &Thermostat, AC Cubicle lamp with On/Off switch, DC Emergency Cubicle lamp with On/Off switch, Corridor Illumination lamps with door switches at both ends ofthe corridor, 5/15A Power Socket with On/Off switch, Switches, Fuses, Links etc. in line with Tech Spec.			

20.01 COMMON RELAY/ PROTECTION PANEL EQUIPMENTS FOR DIFFERENT VOLTAGE CLASS:

Name of Equipment	Quantity	Name of Panel	Remarks
Common items e.g. Circuit Label; Label indicating Manufacturer's Name, P.O. details, Drg. Ref. nos etc.; internally mounted equipments like Heater with Switch &Thermostat, AC Cubicle lamp with On/Off switch, DC Emergency Cubicle lamp with On/Off switch, Corridor Illumination lamps with door switches at both ends ofthe corridor, 5/15A Power Socket with On/Off switch, Switches, Fuses, Links etc. in line with Tech Spec.	As Reqd	For each panel	
Bus PT selection scheme with bi-stable relays for Double Bus arrangement	1set	For each panel (2M1T system & 2M system)	Except Bus Coupler bay
Stand-alone Supervision Relays for CB Trip coils, 86 relay, 96 relay	As Reqd	For each Circuit Breaker	
LBB protection scheme with stand-alone 96 relay, aux relay etc.	1set	For each Circuit Breaker (132kV & above)	
Phase Overcurrent LBB protection with stand-alone 96 relay, aux relay etc.	1set	For each 33kV Feeder bay, Capacitor bay and 33kV side bay of 33/11kV Trafo	

Auxiliary relays for C.B. Closing/Tripping, if necessary	1set	For each Circuit Breaker	
CB Monitoring scheme with Flag Relays/Aux. Relays	1set (Minimum 6nos.)	For each Circuit Breaker	Each coil should have minimum 3NO contacts. Multiplier for CB SPRING CHARGE status should also have an NC contact for SPRING CHARGE FAIL annunciation.
GIS Monitoring scheme with Flag Relays/ Aux. Relays	As Reqd	For each GIS bay	
Stand-alone Protection DC Supply Supervision Relay	1 No each for DC-1 & DC-2	For each bay	
Main DC (for both DC-1 & DC-2), Annun DC, AC Supervision Relays	1 No. each	Each Bus Coupler bay (in case of 2M1T system or 2M system) and Each Bus Transfer bay (in case of 1M1T system)	
Stand-alone Bus Bar Protection DC supply Supervision Relay	1 No	Busbar protection panel	
Main DC, Annun DC Fail Alarm Accept Relay	1 No.	Each Bus Coupler bay (in case of 2M1T system or 2M system) and Each Bus Transfer bay (in case of 1M1T system)	
CB Discrepancy scheme with Flasher relay & Timer	1set	Each Bus Coupler bay (in case of 2M1T system or 2M system) and Each Bus Transfer bay (in case of 1M1T system)	
Test Terminal Block	As Reqd	For each bay	
Bus Transfer Bay Protn. IN/OUT Selector Switch	1 No.	Each Bus Transfer bay	
Distance Relay Setting Group Selector Switch, 4 – position	1 No.	Each Feeder bay & Bus Transfer bay (132kV & above)	
O/C & E/F Relay Setting Group Selector Switch, 3 – position, TRAFO – OFF - LINE	1 No.	Each Bus Transfer bay	
'Bay transfer sequence Incomplete' alarm scheme with Timer	1set	For each bay (in case of 2M1T system or 1M1T system)	

One no. push button each for LED reset of Numerical relay, reset of 86 relay and reset of 96 relay	1set	For each bay	

Notes:

i) In case of incomplete diameter (D and I type layouts), control panel shall be equipped fully as if the diameter is complete, unless otherwise specified. Annunciation shall also be considered for the same and if required, necessary panel shall be supplied to accommodate the same.

ii) The above list of equipments mentioned for control panel is generally applicable unless it is defined elsewhere and in case of bay extension in existing substations, necessary equipments for matching the existing control panel shall be supplied.

20.02 RELAY/ PROTECTION PANEL EQUIPMENTS FOR DIFFERENT VOLTAGE CLASS:

FEEDER BAY					
	400kV	220kV	132kV	33kV	11kV
One no. Numerical relay for Main – I Distance Protection scheme/ Line Differential Protection scheme, as applicable as per resp. Clause	✓	✓	✓	---	---
One no. Numerical relay for Main – II Distance Protection scheme/ Line Differential Protection scheme, as applicable as per resp. Clause	✓	✓	---	---	---
One no. Numerical relay for Directional O/C & E/F Protection scheme/ Distance Protection scheme, as applicable as per resp. Clause	---	---	✓	---	---
Single and Three Phase Auto-reclosing scheme including aux. relays & tripping relays	✓	✓	✓	---	---
Auto Reclose Selector switch	✓	✓	✓	---	---
One no. Numerical relay for Directional O/C & E/F Protection scheme	---	---	✓	✓	✓ (Non Dir)
One no. Numerical relay for Over Voltage Protection scheme	✓	---	---	---	---
One no. Line CVT operated Under Voltage relay	✓	✓	✓		
Flag relays, Carrier Receive relays, Carrier Healthy relays, DT Receive relays, Aux. relays, Timers etc. as per scheme requirements (each coil having minimum 6nos. NO contact)	As Reqd.	As Reqd.	As Reqd.	As Reqd.	As Reqd.
Master Trip relays (86A and 86B)	✓	✓	✓		
Master Trip relay (only 86)				✓	✓
Carrier Selector Switch (One no. for each Distance protection relay)	✓	✓	✓		
Auto Reclose Selector Switch (ON-OFF)	✓	✓	✓		
Auto Reclose Selector Switch (Main I-Main II)	✓	✓			
Selected Bus VT/ Line CVT Selector scheme and associated Relay, as finalized during detail engineering	✓	✓	✓ (If Line CVT is available)		
Carrier Received LED Indicating Lamp	✓	✓	✓		
DT Received LED Indicating Lamp	✓	✓	✓		

HV SIDE OF TRAFO BAY				
	400kV side of 400/220kV Trafo	220kV side of 220/132/33kV Trafo	132kV side of 132/33kV Trafo	33kV side of 33/11kV Trafo
Numerical Differential Protection scheme	✓	✓	✓	✓ (10MVA & above)
Numerical Directional O/C & E/F Protection scheme	✓ (with Check-Sync facility)	✓ (with Check-Sync facility)	✓ (with Check-Sync facility)	✓ (Non Dir)
Numerical Over Flux Protection scheme	✓	✓		
Overload Protection scheme	✓	✓		
REF Protection scheme	✓	✓	✓	✓
Numerical Neutral Displacement Protection scheme	✓	✓		
Power Transformer Auxiliary Protection scheme with Flag Relays/Aux. Relays (Minimum 8 nos. Flag relays, each having minimum 6nos. NO contact for Power Transformer trouble trip status and Minimum 6nos Flag relays, each having minimum 3nos. NO contact for Power Transformer trouble alarm status)	✓	✓	✓	✓
Master Trip relays 86A and 86B	✓	✓	✓	
Master Trip relay (only 86)				✓

LV SIDE OF TRAFO BAY						
	220kV side of 400/220kV Trafo	132kV side of 220/132kV Trafo	33kV side of 220/132/33kv Trafo	33kV side of 132/33kV Trafo	33kV side of 220/33kV Trafo	11kV side of 33/11kV Trafo
Numerical Directional O/C & E/F Protection scheme	✓ (with Check-Sync facility)	✓ (with Check-Sync facility)	✓ (Non Dir)	✓	✓	✓ (Non Dir)
Numerical Over Flux Protection scheme	✓	✓				
REF Protection scheme				✓	✓	✓
Definite time Numerical E/F relay for ET protection scheme (For Yd Transformer)			✓	✓	✓	

Earthing Transformer Auxiliary Protection scheme with Flag Relays/Aux. Relays (Minimum 3 nos. Flag relays, each having minimum 3nos. NO contact)				✓		
Master Trip relays 86A and 86B	✓	✓				
Master Trip relay (only 86)			✓	✓	✓	✓
P.T. selection scheme with bi-stable relays for Double Bus arrangement	✓	✓				
BUS COUPLER BAY						
	400kV	220kV	132kV	33kV	11kV	
Numerical Non-Directional O/C & E/F Protection scheme with Check-Sync facility	✓	✓	✓			
Under Frequency protection scheme				✓		
Master Trip relays 86A and 86B	✓	✓	✓			
Master Trip relay (only 86)				✓	✓	
BUS TRANSFER BAY						
	400kV	220kV	132kV	33kV	11kV	
Numerical Distance Protection scheme	✓	✓	✓			
Numerical Directional O/C & E/F Protection scheme	✓	✓	✓	✓		
Selected Bus VT/ Line CVT Selector Switch (Line VT- Inter1-Inter2-Selected Bus VT)	✓	✓	✓			
Master Trip relays 86A and 86B	✓	✓	✓			
Master Trip relay (only 86)				✓	✓	

	TIE BREAKER BAY
Main – I Numerical Teed Protection scheme with aux relays, trip relays etc.	✓
Main – II Numerical Teed Protection scheme with aux relays, trip relays etc.	✓

Master Trip relays 86A and 86B	✓
	400kV Reactor bay
Numerical Differential Protection scheme	✓
REF Protection scheme	✓
Back-up Impedance Protection scheme	✓
Reactor Auxiliary Protection scheme with Flag Relays/Aux. Relays	✓
Master Trip relays 86A and 86B	✓
	33kV Capacitor Bank bay
Numerical Non-Directional O/C & E/F Protection scheme	✓
Numerical Under voltage/ Over-voltage Protection scheme	✓
Numerical Unbalance Protection scheme	✓
Time delay relay	✓
Master Trip relay (only 86)	✓

Notes:

i) In a substation where 400kV and 220 KV lines are under the scope of the contract, bidder is required to give identical Main-1 and Main-2 distance protection schemes for all voltage levels.
ii) These are the main protections. However, other ancillary relays required for the respective C&R panel viz. Trip Circuit supervision relay, Direct Trip Command relay, Transformer trouble relay, High speed trip relays, contact multiplication relay etc shall be as per tender technical specifications.

20.03 BUS ZONE PROTECTION FOR 400KV, 220KV & 132KV SYSTEM:

All Equipment/ relays, trip relays with trip coil supervision relay, Local Breaker Back-up protection relay, CT Switching relay etc for all connected bays and bus extension bays with the provision of future bays along with CPU & Bay unit for the bus bar protection scheme as required for busbar protection as per resp. Clause shall be provided in one set of separate simplex type panel.

21.00 DEVIATION:

Normally the offer should be as per technical specification without any deviation. For any deviation in the tender quoted by the tenderer, the same shall be clearly indicated in the deviation sheet, clause by clause, indicating reason and advantage for such deviation. Such deviations may or may not be accepted. Deviation not indicated in the deviation sheet will not be considered.

22.00 RECOMMANDED SPARES:

A list of spares recommended by the bidder for ten years satisfactory performance along with item wise unit price shall be furnished with the tender. The purchaser will decide the actual quantity of spares to be ordered on the basis of the list and item wise prices quoted. This shall not be taken into consideration for the purpose of evaluation of bid.

23.00 TENDER DRAWING, LITERATURE AND TEST CERTIFICATES BOTH FOR ROUTINE TESTAND TYPE TEST:

Following drawings, literatures, filled up GTP and test certificates shall be submitted with the tender for evaluation:

a) Principal dimensioned details of each unit cubicle and complete assembly of panel board.
b) Front and rear views of the panel board with instrument and device positions marked.
c) Details of protection scheme of lines, transformers and other bays including annunciation, monitoring, supervision etc. offered.
d) Literature describing the instruments, switches, relays and their characteristics, technical details, relay setting calculation, operating manual etc.
e) Routine and type test certificates of all the protective relays carried out as per relevant IEC/ IS from a recognised laboratory shall be furnished. Performance certificate of all protective relays from Power Utilities in India shall also be furnished.

24.0 CONTRACT DRAWING AND LITERATURE:

24.01 The following drawings in six (6) copies of each are to be submitted by the successful bidder for approval of the purchaser before starting manufacturing of the same.

a) Detailed dimensional drawings of control and relay panel including foundation drg. with cable slots showing all equipment mounted on them along with complete panel wise list of equipmentand list of Name Plates. Weight of these panels with all the equipment mounted on these shall also be furnished in the Drg.
b) Contact development drawings of all switches, relays etc.
c) All internal configuration logic built-up in Numerical IEDs/ BCUs.
d) Outlined drawings of internal wiring diagram of the instrument, relays, meters, annunciator and other equipment showing external terminal connections with the equipment terminal number.
e) Complete AC and DC Schematic diagram of all panels of control and relay board to indicate the followings:
   i) Annunciator circuit
   ii) Protection and control circuit
   iii) Indication and Supervision circuit
   iv) Synchronising circuit
   v) Other circuits as necessary

These drawings shall show AC power connection and Secondary connections for relays, meters, terminal blocks with their number etc. interconnection diagram between control and relay board and circuit breaker, Power and Instrument Transformer and other equipment as necessary.

24.02 After approval of above drawings ten sets of those drawings for each set complete set of C&R board and wiring schedule including bus wire diagram for each panel are to be supplied by the contractor.
One set of reproducible of the above drawings for each C&R board formation shall also be supplied.

24.03 Six copies of the following literatures shall be supplied along with the approved drawings and **one set of the same (soft copy) shall be supplied along with the drawing in the first submission**:

a) Literature describing construction, operation, adjustment and rating specification of all theprotective and auxiliary relays, recording instruments, metering instruments, control and other switches, annunciators, fault locator, disturbance recorder and other equipments which are used in the C&R panel.
b) List of spare parts, identification number of renewable parts of relays, instruments, switches and other equipments with the help of which the purchaser will be able to procure spare parts from the contractor at any subsequent line.
c) Commissioning, operating, maintenance instruction manual for each relay and equipment of the panel.

25.00 TEST AT FACTORY:

The following tests shall be carried out and six (6) copies of test certificates along with test result shall be supplied for approval.

a) Visual checking of C&R panel.
b) Checking wiring of circuits and continuity.
c) One minute applied voltage test. All equipments on panel and wiring shall be tested for a withstand voltage of 2 KV between different circuits shorted and earth.
d) Insulation resistance of the complete wiring, circuit by circuit with all equipment mounted on the board before and after HV test.
e) Routine tests according to the relevant standards on the instruments, relays and other devices.

26.00 INSPECTION/ TEST WITNESS:

a) Tests shall be performed in presence of the purchaser's representative, if so desired by the purchaser. The contractor shall give at least 21 (twenty one) days advance notice of the date when the tests are to be carried out at manufacturer's works.

b) Relays and meters may be further tested at our testing laboratory. If any equipment is found to be not in conformity with the specification by our testing engineers during testing, the same shall be replaced by you at your cost immediately.

TECHNICAL SPECIFICATION FOR 11KV, 1250 AMP
VCB SWITCHGEAR PANELS (MC VCB) – INDOOR

1. SCOPE

1.1. The section covers the specification of metal clad indoor vacuum type switchgear unit with horizontal draw out circuit breaker as per IS 13118 [1991] / IEC 62271-100/ IEC 62271- 200 or latest amendment thereof. The equipment offered shall be of high quality, sturdy, robust and of good design and workmanship complete in all respects and capable of performing continuous and satisfactory operations in the actual service conditions at site and shall have sufficiently long life in service as per statutory requirements.

1.2. All equipment shall be suitable for satisfactory operation in tropical climates and hot and humid atmosphere prevailing in the location where it shall be used against the Contract. The equipment shall be able to withstand a wide range of temperature variations in the required location.

1.3. The equipment offered shall be complete with all parts necessary for their effective and trouble-free operation. Such parts shall be deemed to be within the scope of the supply irrespective of whether they are specifically indicated in the commercial order or not.

1.4. All the plant / apparatus / equipment supplied shall comply in all respect with the requirement of Indian Electricity Act 2003 and Indian Electricity Rule 2003/IS and latest amendment thereof during the execution of contract where-ever applicable.

1.5. The Tenderer/supplier shall bind himself to abide by these considerations to the entire satisfaction of the purchaser and will be required to adjust such details at no extra cost to the purchaser over and above the tendered rates and prices.

2. SYSTEM CONDITIONS

2.1. The switchboard shall be metal enclosed, floor mounting, single front self supporting cubical type suitable for indoor. The switchgear shall be easily extendable in future.

2.2. The switchgear assembly shall be designed for the power system having the following parameters.

a) Nominal system voltage: 11KV
b) Highest system voltage: 12KV
c) Number of phases: 3
d) Frequency: 50 Hz ± 3%.
e) System earthing: Solidly earthed neutral
f) Short Current Rating: 25kA for semi-urban/rural and 31.5kA for urban

3. SERVICE CONDITIONS:

Maximum altitude above sea level	*100m*
Minimum ambient air temperature	*45℃*
Maximum daily average ambient air temperature	*40° C*
Minimum ambient air temperature	*2° C*
Maximum temperature attainable by an object exposed to the sun	*60° C*
Maximum yearly weighted average ambient temperature	*32° C*
Maximum relative humidity	*98%*
Average number of thunderstorm days per annum (isokeraunic level)	*45→50(MV)*
Average number of rainy days per annum	*120*
Average annual rainfall	*2200 mm*
Maximum annual rainfall	*3500 mm*
Maximum wind pressure	*260Kg/m²*
Seismic level(Horizontal acceleration)	0.24g to 0.48g
Climatic condition Moderately hot and humid tropical climate conducive to rust and fungus growth.	

4. STANDARDS *:*

The circuit Breaker shall confirm to the latest revision with amendment available of relevant standards, rules, and code. Some of which are listed herein for ready reference.

Sl. No.	Standard	Item
1	*IEC- 62271-100/200 / IS-13118 (1991)*	*High Voltage Alternative current circuit breaker.*
2	*IS-2705 (1992)*	*Current Transformer*
3	*IS-3156 (1992)*	*Voltage Transformer*
4	*IS-3231 (1987)/IEC 60255 (All parts) IEC 61850 Ed-II*	*Numerical Relays*
5	*IS-1248*	*Ammeter & Voltmeter*
6	*IS-375*	*Arrangement of Breakers Bus Bars main connection and auxiliary wiring.*
7	*IEC-60687/CBIP REPORT NO-88 (JULY) 1996)*	*Tri vector meter*

5. GENERAL TECHNICAL/CONSTRUCTIONAL REQUIREMENTS

5.1. General Requirements

a) The switchgear shall be of CRCA steel / corrosion proof aluminium-zinc construction with sheet not less than 3 mm thickness for load bearing section and not less than

2mm thickness for non-load bearing and shall totally dust and vermin proof. However, if vendor has standardized the thickness of enclosure other than above mentioned and it meets the performance requirements and the design has been established through type test, the same shall be accepted. The panels shall be rigid without using any external bracings. The switchboard panels should comply with relevant IS / IEC and revision thereof and shall be designed for easy operation maintenance and further extension. Each circuit shall have a separate vertical panel with distinct compartments. Bus bar, metering, circuit breaker chamber, cables and cable box chamber should have proper access for maintenance and proper interlocks should be provided. All instruments (Except the Relays) shall be non-draw out type and safe guard in every respect from damages and provided with mechanical indicator of connection and disconnection position. The switchgear shall be completed with all necessary wiring, fuses, auxiliary contacts, terminal boards etc.

b) *The switchgear boards shall have a single front, single tier, fully compartmentalized, metal enclosed construction, comprising of row of freestanding floor mounted panels. The adjacent panels shall be completely separated by steel sheets except in busbar compartments where insulated barriers shall be provided to segregate adjacent panels. The switchgear assembly shall be dust, moisture, rodent and vermin proof, with the truck in any position SERVICE, ISOLATED, TEST or removed, and all doors and covers closed. All doors, removable covers and glass windows shall be gasketted all round with synthetic rubber or neoprene gaskets.*

c) *The arcing contacts and bus bar should be rated for 25KA/31.5 KA faults for 3 seconds for 11kV system. Bus bars shall be capable of connecting one switchgear panel to other through proper insulated arrangement. The panels shall be modular in design.*

d) *The switchgear will be installed in a separate switchgear room, but the controls under normal conditions will be from the 11 kV remote supervisory control desk installed in the main control room.*

a) *The breakers should be able to be drawn out in horizontal position at ground level [with vertical/horizontal isolation]. When breaker is drawn out in horizontal position none of the live components inside the 11KV switchgear panel should be accessible. The safety shutters shall be robust and shall automatically cover the live components when the breaker is drawn out. The switchgear shall have complete interlocking arrangements at the fully inserted and fully drawn out and test positions. Withdrawal of the breaker should not be possible in ON position, it should not be possible to close the circuit breaker in service unless the entire auxiliary and control circuit are connected.*

b) *Circuit breaker shall be vacuum; draw out type housed in a separate cubicle of the switchboard and shall be enclosed from all sides. A sheet steel hinged lockable door shall be at the front. It shall be possible to withdraw the circuit breaker to 'Test' and "Isolated' position with the door closed. Door interlock shall be provided such that the door can only be opened after withdrawing the breaker to 'Isolated' position and the*

breaker cannot be racked into the 'Service' position unless the door is closed. A visual indication as to show when the breaker is in 'Service', 'Test' or 'Isolated' position shall be provided in front of the door.

c) *Switchgear construction shall have a bushing or other sealing arrangement between the circuit breaker compartment and the busbar / cable compartments, so that there is no air communication around the isolating contacts in the shutter area with the truck in service position.*

d) *The breaker and the auxiliary compartments provided on the front side shall have strong hinged doors, busbar and cabling compartments provided on the rear side have bolted compartment covers with self retaining bolts. Breaker compartment doors shall have locking facility.*

e) *Built-in / separate trolley mounted earth switches for incomer (busbar earth) and outgoing (feeder cable earth) shall be provided.*

f) **All the high voltage compartments must have pressure discharge flap for the exit of gas due to internal arc to insure operator safety. All the HV compartment design shall ensure conformity to IEC-60298 and must be type tested at 26.3 kA for 1 second for IAC classification and duration as per IEC As per IEC 62271-200 clause A. 4.5 (AFLR).**

g) *Two separate earthing terminals shall be provided in each panel and shall be connected to the earth bus within the panel. The earth bus shall be of copper and shall have adequate cross sectional area.*

h) *The bus PT/relay compartments shall have degree of protection not less than IP:52 in accordance with IS:2147. However, remaining compartments can have a degree of protection of IP:42. All louvers if provided shall have very fine brass or GI mesh screen, IPH-2 degree of protection as per IS: 3427 to all live parts shall (whether isolated or removed from panel) even when the breaker compartment door is open. Tight fitting garments / gaskets are to be provided at all openings in rely compartment.*

i) *Total height of the switchgear panels shall not exceed* **2600** *mm. The height of switches, pushbuttons and other hand-operated devices shall not exceed 1800 mm and shall not be less than* **700mm**.

j) *Suitable base frames made out of steel channels shall be supplied along with necessary anchor bolts and other hardware, for mounting of the switchgear panels. These shall be dispatched in advance so that they may be installed and levelled when the flooring is being done, welding of base frame to the insert plates shall be as per approved installation drawings.*

k) *The switchboard shall have the facility of extension on the both sides of Adapter panels and dummy panels required to meet the Busbar.*

5.2 BUS BARS AND CONNECTORS

a) *Bus bars and all other electrical connection between various components shall be made of electrolytic copper of rectangular / tubular cross sections, as per the type tested and ratified design. The bus bars section should have ample capacity to carry the rated current of minimum 1250 Amps in panel current rating at an ambient temperature of 40 deg C, continuously without excessive heating and for adequately meeting the thermal and dynamic stresses in the case of short circuit in the system up to full STC rating of 25kA for 3 sec. The Current density of 1.6Amps/sq. mm shall be considered for the bus bars.*

b) *All bus bars connections shall be firmly and rigidly mounted on suitable insulators to withstand short circuit stresses and vibrations. 'Self-supported busbar' design will be acceptable if the same is ratified by type tests for the specified rating and busbar support drawings approved during type tests shall be furnished with the offer.*

c) *All fasteners (Nuts Bolts) used for bus bar connections shall be of non-magnetic stainless steel. Only belleville type washers shall be provided for each nut bolt. If the fasteners used are not of stainless steel the bidder shall state in their offer the material used and confirm that the same is non-magnetic and is superior to stainless steel.*

d) *Adequate clearance between 11 kV point and earth and between phase shall be provided to ensure safety as per provision in Indian Electricity Rule 2003 and its amendment thereof and also in accordance with the relevant Indian standard specification and the same shall be capable of withstanding the specified high voltage tests as per IEC 62271-200 / IS 13118 and amendment thereof.*

e) *Sharp edges and bends either in the bus bars or bus bar connections shall be avoided as far as possible. Wherever such bends or edges are un-avoidable, suitable compound or any other insulation shall be supplied to prevent local ionization and consequent flashover.*

f) *The bus bars alongwith their supporting insulators etc. shall have a short time current rating of 25 KA for 3 sec. Test certificate of bus bar for rated STC rating shall be submitted, alongwith the bid. This shall be confirmed by the tenderers in their technical offer. These insulators shall be of solid core porcelain or epoxy resin cast, with suitable petticoat design. Insulators shall have a cantilever strength of not less than 1200 KgF.*

g) *The Bus Bar should be colour coded.*

5.3 CIRCUIT BREAKER :

a) *The vacuum circuit breaker shall be draw out type suitable for installation in the switchgear cubicles (indoor). The breaker shall comply with IEC 62271-100 / IS- 13118 (1991) for circuit breaker and IEC 62271-200 for the switch gear and latest amendment thereof. Construction of breaker shall be such that the points, which require frequent maintenance, shall be easily accessible.*

b) *The circuit breakers shall be spring operated, motor/manually charging of the spring feature, manually released. VCB shall have spring closing mechanism for 3 pole simultaneous operation. The speed of closing operation shall be independent of the speed of hand operating level. The indication device shall show the OPEN and CLOSE position of breaker visible from the front of cubical.*

c) *The circuit breakers shall be* **type tested as per IEC 62271 for compliance with the following requirements :**

a. **E2 class***: The circuit breakers shall not require maintenance of the interrupting part of the main circuit during its expected operating life;*

b. **C2 class:** *The circuit breakers shall have very low probability of restrike during capacitive current breaking.*

c. **M2 class:** *The circuit breaker should require very limited maintenance and should be tested for endurance for 10,000 close – open operations.*

d) *The breakers shall be capable of making and breaking the short time current in accordance with the requirement of IEC 62271-100 / IS 13118 (1991) and latest amendment thereof and shall have three phase rupturing capacity of 25KA for 3 second at 11 KV. The continuous current rating of all current carrying parts of breaker shall be 1250 Amps for all items. The total break / make time shall be not more than 4 cycles for break and 6 cycles for make time for all breakers.*

e) *Circuit breaker shall be suitable for rapid reclosing cycle i.e.* **O-0.3 sec.-CO-30 sec.-CO.**

f) *The spring release coil for VCB close and VCB trip coil shall both be rated for continuous energization at the rated close / trip voltage. Trip and close coil shall be suitable for 110 V DC.*

g) *The vacuum circuit breakers shall ensure high speed extinction and adequate control of pressure during breaking of current and also designed to limit excessive over voltages.*

h) *Comprehensive interlocking system to prevent any dangerous or inadvertent operation shall be provided. Isolation of circuit breaker from bus bar or insertion into bus bar shall only be possible when the breaker is in the open position.*

i) *Vacuum Circuit Breaker shall have completely sealed interrupting units for interruption of arc inside the vacuum. The vacuum interrupter sealed for life.*

j) **Vacuum interrupter should have an expected life of 30000 operations at rated current and should be capable for operating at least 100 times at rated short circuit current.**

k) *Vacuum interrupter technical data sheets & outline drawing particularly provided by the manufacturer should also be provided with Bid.*

l) *The circuit breaker shall be provided with motor for spring charging operation. Spring charging motor shall be suitable for 240V, 50 Hz, single phase AC and 110 V DC Supply. Suitable rating starter/fuse shall be provided for Motor protection. Provision*

shall be available for charging the springs manually as well, and to close CB mechanically.

m) *All circuit breakers shall have mechanical ON/OFF indicator and spring charge indicator. These shall be visible from the front without opening the panel door. Also there shall be provision for mechanical (manual) tripping and also for manual charging of the springs.*

5.4 CURRENT TRANSFORMERS *:*

a) *The requirement of ratio, VA capacity, class or accuracy, limit factor etc. for resin cast CTs installed in different type of units are tabulated below :*

Item	*Core / CT*	*Ratio*	*VA Burden*	*Knee Point Voltage*	*ALF / ISF*	*Class of accuracy*
Incoming Panel	*Metering*	*600-300/5A*	*2.5*	*--------*	*ISF < 2.5*	*0.5s*
	Protection	*600-300/5A*	*10*	*--------*	*ALF = 10*	*5P*
	Protection	*600-300/1A*	*10*	*300V at 600/1A tap*	*-------*	*PS*
Outgoing Panel	*Metering*	*400-200/5A or 200-100/5A*	*2.5*	*--------*	*ISF < 2.5*	*0.5s*
	Protection	*400-200/5A or 200-100/5A*	*10*	*--------*	*ALF = 10*	*5P*

b) *Primaries shall be wound or bar or window type, rigid, high conductivity grade copper conductor. Unavoidable joints on the primary conductor shall be welded type, preferably lap type. The current density at any point shall not exceed 1.6 A/sq. mm.*

c) *The Insulation level of all the CTs shall be : 12/28/75 kV and the Class of Insulation shall be "E".*

d) *Short time current rating of CTs shall correspond to 25KA faults for 3 seconds of 11kv system. CTs shall be triple / double core and dual ratio. Instrument safety factor for metering core shall not exceed 2.5.*

e) *The designed accuracy should be available even at the lowest ratios.*

f) *The secondary terminal of the current transformers shall be such that effective and firm wire terminations are possible. Shorting links of adequate capacity shall be provided at the terminal blocks for sorting of the leads from secondary terminals of current transformers. The secondary terminal of the CTs shall be earthed at one point.*

g) *CTs shall confirm to IS 2705 with latest amendment and relevant IEC standard, if any in all respect and will be subjected to all routine and type test specified in the IS/IEC.*

h) *The CTs shall be resin/epoxy cast. Contact tips on primary terminals shall be silver plated. Correct polarity shall be invariably marked on each primary and secondary terminals.*

i) *Secondary terminal studs shall be provided with at least three nuts, two plain and two spring washers for fixing leads. The stud, nut and washer shall be of brass, duly nickel plated. The minimum outside diameter of the studs shall be 6 mm. The length of at least 15 mm shall be available on the studs for inserting the leads. The space clearance between nuts on adjacent studs when fitted shall be atleast 10 mm.*

5.5 POTENTIAL TRANSFORMERS

a) *1 No. 3 phase resin cast, draw out type,* **bus bar connected**, *potential transformer* **of 5-limb construction**, *ratio 11000/110 volts, class 0.5 accuracy at 50 VA output per phase, complete with HT HRC fuse and Triple Pole & Neutral MCB, rated 1 Amp, with monitoring contacts on PT LV circuit.* **Primary and secondary neutrals of the PT must be brought out and earthed. If required, the busbar connected P.T. may be housed in a separate cubicle.** *PT mounted on top of the panel will not be acceptable*

b) *H.V side shall be connected in star formation and L.V. side in star/open delta formation.*

c) *PT may be provided in a separate compartment. The primary and secondary contacts (moving & fixed type) shall have firm grip while in service. Service position locking mechanism shall be provided and indicated by bidder in relevant drawing. Rigidity of primary stud point with earth bus in service position shall be confirmed.*

d) *Contact tips of primary/secondary contacts shall be silver plated. Correct polarity shall be distinctly marked on primary and secondary terminal*

e) *Secondary terminal studs shall be provided with at least three nuts, two plain and two spring washers for fixing leads. The stud, nut and washer shall be of brass, duly nickel plated. The minimum outside diameter of the studs shall be 6 mm. The length of at least 15 mm shall be available on the studs for inserting the leads. The space clearance between nuts on adjacent studs when fitted shall be at least 10 mm.*

f) Details of PTs

i) IS: 3156 and relevant IEC standard.
ii) Ratio : 11KV/√3/110V/√3
iii) No. Of phases: 3 Phases / star - star connected.
iv) Insulation level : 12/28/75 kV
v) Class of Insulation : Class E
vi) Rated voltage factor: 1.2 continuous & 1.5 for 30 Sec.
vii) Rated Burden : 100 VA per phase
viii) Class of accuracy: 0.5
ix) Purpose : Metering
x) Primary wiring of the PTs shall be protected by suitable H.R.C. fuse.
xi) Each secondary core will be protected by suitable MCB.

Two sets of 11 KV/110 V PTs shall be provided

5.6 PROTECTION RELAYS :

a) *All relays shall conform to the requirements of IS: 3231 / IEC-60255/ IEC 61850. Relays shall be suitable for flush or semi-flush mounting on the front with connections from the rear. The relay for entire project shall be of same type. The relays shall be* **numerical protective & communicable** *type. Composite relay unit having O/C, E/F & directional element etc. shall be preferred. Relays should have USB / ethernet communication port and RS485 / RS232 serial communication port for communication through IEC 61850 Ed II (with high-speed GOOSE communication and certified by KEMA/CPRI certificate level A for IEC 61850 compliance). Licensed version of the relay software should be provided as per user's requirement.*

b) **The detailed specification of the protective relays shall be as per the latest technical specification for protection relays (Refer Protection relays standard technical specification uploaded in the official website vide Standard Technical Specification.**

5.7 MEASURING INSTRUMENTS

a) *All instruments shall be switchboard type, back connected, suitable for flush mounting and shall comply with the requirements of latent issues of relevant Indian Standards. The instrument cases shall be dust proof, water tight, vermin proof and specially constructed to adequately protect the instruments against damage or deterioration due to high ambient temperature and humidity.*

b) *All instruments shall be access adjustable and calibrated before dispatch and shall have means for calibration check and adjustment at site.*

c) *All ammeters shall be digital type with direct reading scales. The scale value of ammeters shall be as per the primary current ratings of the associated current transformers. The rated current of ammeter elements shall be 5 Amperes and Accuracy class 1.0 as per IS: 1248.*

d) *All voltmeters shall be of digital type with direct reading scales. The maximum scale value of voltmeters shall be 50% in access of the primary voltage of associated PT. The rated voltage of the voltmeters shall be 110 volts A.C. and accuracy class shall be 1.0 as per IS: 1248.*

e) *Indicating wattmeters shall be of digital type of accuracy class 1.*

f) *Static digital tri-vector energy meter suitable for 3-phase 4-wire un-balanced load and CT, PT, ratio mentioned above, 0.5 accuracy class with load, survey and TOD/Tariff and MRI facility (with DLMS protocol compliant – CAT A) . The detailed specification of the tri-vector meter shall be as per the latest technical specification for HT Tri- vector meters (Cat A) (Refer standard technical specification uploaded in the official website).*

5.8 Circuit Breakers Control Switch:

a) *Circuit Breakers Control Switches should have finger touch proof terminals. For the convenience of maintenance, screw driver guide should be from top/bottom of the switch and not from the side. Terminal wire should be inserted from the side of the switch terminal.*

b) *Terminal screws must be captive to avoid misplace during maintenance.*

c) *Switch shall be with 48 mm x 48 mm escutcheon plate marked with Trip & Close.*

d) *Circuit Breakers control switch shall be non- discrepancy type*

e) *Trip-neutral-close, with pistol grip handle must be pushed in to spring return to either trip or close position from Neutral position for safety and not just turn to trip.*

f) *One contact to close in each position of Trip and Close. Contact not required in Neutral position. Contact rating shall be 12A at 110V DC*

5.8 CUBICLE

a) *The switchgear cubicle (panel) shall be free standing floor mounting indoor type. There shall be sufficient reinforcement to have level surfaces resistance to vibration and rigidity during transportation & installation.*

b) *Design & construction of the switchgear panel shall be of the highest order. All sheet steel work shall be treated as per the seven tank process before applying primary coating. For the final coat (stowed) epoxy paint color shade of light admiral grey to shade No.697 as per IS:5 shall be used. Alternatively powder coating may also be accepted. The panels after final painting shall present an aesthetically pleasing appearance, free of any dent or uneven surface.*

c) *Power cable compartment shall be provided at the rear of the switchgear panels and shall be suitable for cable entry from the bottom cable trenches. Rear bottom plates of the cable compartment shall be fitted with removable gland plates of adequate size for fixing the cable glands.*

d) *Cable compartments for the incomer shall be suitable for terminating 3nos. of 3x400 sq.mm XLPE cables and that for feeder shall be suitable to accommodate 2 nos. of 3x400 sq.mm. XLPE cables. Copper terminator strip of suitable size shall be provided for termination of cables and shall have adequate height inside to accommodate the heat shrinkable type indoor cable termination. Cable compartment shall be robust enough & self-supporting. The design shall be such that the weight of the power cable within the compartment shall not cause direct pressure on the C.T. studs. Suitable clamping arrangement shall be provided at the bottom of the cable compartment. Each power cable shall be terminated independently.*

5.9 CABLE GLANDS AND CLAMPING ARRANGMENT FOR HOLDING SUITABLE CABLE BOXES

a) *Two nos., brass, wiping glands for each incomer and one no. Brass wiping gland for each outgoing panel of adequate dimension for XLPE cable of 3 cores up to 400 sq. mm size shall be supplied along with panels. For bus coupler no cable glands should be provided.*

b) *Suitable cable boxes as per requirement of cable shall be arranged by the purchaser at his end. The panel shall however provide a flat of size 50X6 mm^2 with suitable clamp made of 50X6 mm^2 flat along with Nuts Bolts and Washers for holding the cable boxes. The flat should be fitted at a suitable height with allotted arrangement for adjustment of height from 300mm to 500mm at site. The clamp and flat shall have suitable stud type arrangement for earthing cable and cable box.*

c) *All control cable / wire entries shall be by means of suitable cable glands, such glands shall be of brass and tinned.*

5.10 AUXILIARY/CONTROL WIRING :

a) *All the secondary wiring in the panel shall be 1100 volts grade single core, multi- strand flexible tinned copper wires have high quality PVC insulation and the same shall have conductor size of not less than 2.5 mm² of copper. Colours of the secondary/auxiliary wiring should confirm to IS 375/1963 and latest amendment thereof if any. All wiring shall be neatly run and group of wiring shall be securely fixed by clips so that wiring can be checked without necessity of removing the clamps. Wiring between fixed and moving portion of the panel shall be run in flexible tubes and the same shall be so mounted to avoid any damage to them due to mechanical movements. Ferrules with number shall be provided on both end of the wiring.*

b) *All front mounted as well as internally mounted items including MCBs shall be provided with individual identification labels. Labels shall be mounted directly below the respective equipment and shall clearly indicate the equipment designation.*

c) *Terminal blocks shall be of screw type design made out of non-trackable insulating material of 1100 V grade. All terminals shall have all current carrying and live parts made of tinned plated brass. The washers, nuts, etc. used for terminal connectors shall also be of tinned plated brass.*

d) *At least 20% spare terminals shall be provided. All terminals shall be provided with ferrules indelibly marked or numbered and identification shall correspond to the designations on the relevant wiring diagrams. The terminals shall be rated for adequate capacity which shall not be less than 10 Amps for control circuit. For power circuit it shall not be less than 15 Amps.*

e) *All fuses used shall be of HRC type. The fuse base and carrier shall be plug-in type moulded case kitkat of backelite/DMC. All current carrying and live parts shall be of tinned/nickel plated copper. No fuse shall be provided on DC negatives and AC neutrals. Tinned copper links shall, however, be provided on DC negatives and AC neutrals.*

f) *All MCBs as per IS:8828/2006 (amended upto date) of adequate rating shall be used.*

g) *Auxiliary supplies available at the various sub-stations are as follows:-*

Rating:

i	*A. C. Supply*	*240 volts with ± 10% variation*
ii	*D.C. Supply*	*110 V DC with +10% to – 15% variation*
iii	*Frequency 50 Hz*	*with ± 3% variation*

5.11 MARKING OF PARTS :

For facilitating the erection, the several parts of the plant and equipment shall be suitably marked.

5.12 NAME PLATE AND DIAGRAM PLATES :

All equipment shall have weather proof and non corrosive metal plates fixed in suitable position with full particulars engraved thereon with white letters against black background. The firm shall affix a name plate on each Switchgear panel having following information:

1. *Manufacturer's name and trade mark.*
2. *Serial No.*
3. *Type of Panel.*
4. *CT Ratio.*
5. *Rated Voltage.*

6. *Rated Insulation Level*
7. *Rated Frequency*
8. *Rated Normal Current*
9. *Rated Short Circuit Breaking Current.*
10. *Weight*
11. *Specification No.*
12. *Order No. and Date*
13. *Year of supply.*
14. *Property of MePTCL.*

5.13 PAINTING :

All metallic surface [except corrosion resistant aluminium-zinc material and enamelled and bright parts] exposed to weather shall be given suitable primer coat and two coats of first quality paint of approved colour. The supplier shall also supply adequate quantities of paints, varnish etc. for use of finished cost and for use of patching up any scratches received during transport, handling erection testing and commissioning.

Instead of above proper powder coating after proper pre treatment is acceptable and in that case earlier condition will not applicable.

5.14 DETAILED FITTING AND MOUNTING :

Detailed fittings and mountings of equipment in various switchgear panel shall be as follows

a) **ITEM NO. 1 – INCOMING PANELS RATING; 1250 AMP WITH CT RATIO 600-300/5-5-1A**

Each unit shall have the fittings and equipment as follows:

- *1 No totally enclosed, fully interlocked, indoor industrial pattern, metal clad, horizontal draw out, vertical/horizontal isolation floor mounting switch unit complete with transportation truck having integral mechanism and all necessary supports each equipped as under :*
  - *(i) 1 No Fabricated sheet steel / corrosion proof aluminium-zinc housing.*
  - *(ii) 1 No. Complete set of mechanical interlocks.*
  - *(iii) 1 set of 1250 Amps rated bus bars.*
  - *(iv) 1 No. Set of isolating plugs and sockets [6 nos. rated for 1250 Amps with automatic safety shutters and pad locking arrangements. Facilities shall be provided for proper opening of the safety shutter for cleaning,*
  - *(v) 1 No. 1250 Amp triple pole VCB fitted with isolating sockets, spring operated, manually as well motor charged, manually / electrically released spring closing mechanism with mechanical ON/OFF indicators suitable for a rupturing capacity of 25KA at 11 kV for 3 seconds and fitted with one set of direct acting trip coils suitable for operation with AC series trip relays.*
  - *(vi) 1 No. Auxiliary switch with minimum four normally closed and four normally open contacts. The contact terminals shall be brought out and terminated at Terminal Board irrespective of whether terminals are used or not.*

- *3 Nos. 600-300/5-5-1 A ratio ratio, triple core resin cast current transformer of required Accuracy, for metering, protection and differential protection. Alternatively single core dual ratio CTs shall also be acceptable.*
- *1 No. digital ammeter, case size 96mm. x 96mm, flush mounting type, with suitable range as per CT ratio.*
- *1 No. 3 way and off ammeter selector switch for selecting the currents in all 3 phases.*
- *1 No. 3 phase resin cast, draw out type,* **bus bar connected***, potential transformer* **as mentioned in the Clause 5.5.**
- *1 No. digital voltmeter, case size 96mm. x 96mm., flush mounting type, with range 0-15 kV.*
- *1 No. 6 way and off voltmeter selector switch for reading the phase-phase and phase-neutral voltage between any two phases on the voltmeter.*
- *1 no. digital frequency meter, case size 96mm. x 96mm., flush mounting type.*
- *1 no. digital power factor meter, case size 96mm. x 96mm., flush mounting type, for measurement of power factors of each phase and average power factor.*
- *1 No. static digital tri-vector energy meter suitable for 3-phase 4-wire un-balanced load and CT, PT, ratio mentioned above, 0.5s accuracy class with load, survey and TOD/Tariff and MRI facility (with DLMS protocol compliant – CAT A) . TVM shall be strictly as per specification as detailed in the clause no 5.7.*
- *1 No. numeric IEC 61850 Ed II compliant relay as detailed in clause no 5.6.*
- *3nos. CTs of 600-300/5-5-1 A as detailed in clause no 5.4.*
- *1 No. 12-window (big windows) annunciator with separate push buttons for test / accept / mute / reset and with hooter for fault annunciation.*
- *1 set of LED indicating lamps with low voltage glow protection (L.V.G.P.) circuit and surge protection circuit for On (red) / Off (green) / Trip circuit healthy (white) / Auto-trip (amber) / Spring charged (blue) / PT supply phases (red-yellow-blue) / dc failure (amber) / ac failure (yellow) / VCB 'test' position (white) / VCB 'service' position (red) indications.*
  All LEDs shall be suitable for operation on 24 to 240 volts, ac or dc supply.
- *1 No. 80 watts continuously rated tubular / strip type heater with manual ON/OFF switch working on 230 volts AC single phase supply.*
- *1 set of copper bus bars of 1250 Amps continuous rating.*
- *1 No. multi way plug box for secondary wiring between the fix and moving glands.*
- *1 No. set of independently operated automatic shutters for bus bar, cable and voltage transformers orifices, which shall be clearly labelled and individually pad-locked.*
- *1 No. instruments panel mounted on the front of the unit with hinged access doors and totally enclosed wiring terminals mounted there.*
- *1 No. Complete set of self-contained inter connectors, foundation bolts, fine Wiring, wiring terminals board, sundries to complete the unit.*

b) **ITEM NO. 2 OUTGOING FEEDER PANEL WITH CT RATIO 400-200 /5-5A OR 200-100/5-5A :**

The fittings and mountings shall be similar to item no. 1 above except the following:

- *The CT ratio will be 400-200/5-5 Amps OR 200-100/5-5 Amps, depending on the actual requirement and as detailed in the clause no 5.4.*
- *1 No. static digital tri-vector energy meter suitable for 3-phase 4-wire un-balanced load and CT, PT, ratio mentioned above, 0.5s accuracy class with load, survey and TOD/Tariff and MRI facility (with DLMS protocol compliant – CAT A) . TVM shall be strictly as per specification as detailed in the clause no 5.7.*

c) **BUS SECTIONALIZER PANEL :**

The fittings and mountings shall be similar to item no. 1 above except the following :

- *The voltage transformers, voltmeter, voltmeter selector switch, frequency meter, power factor meter and PT supply phase indication lamps shall be deleted.*

NOTE: Separate spring charging handle and rack-in / rack-out handles shall be provided and supplied with each switchgear.

5.15 ANNUNCIATION SYSTEM :

Alarm annunciation system shall be provided in the control board by means of visual and audible alarm in order to draw the attention of the operator to the abnormal operating conditions or the operation of some protective devices. The annunciation equipment shall be suitable for operation on the voltages specified in this specification i.e. 110 volts dc for new substation or as existing dc supply system of the utility (this shall be verified by the successful bidder before submission of the drawing for approval).

Audible annunciation for the failure of dc supply to the annunciation system shall be provided and this annunciation shall operate on 240 Volts ac supply. On failure of the dc supply to the annunciation system, a bell shall immediately sound. A separate push button shall be provided for the cancellation of this audible alarm alone but the LED lamp shall remain steadily lit till the supply to annunciation system is restored.

A separate dc supply operated relay shall be provided to monitor the failure of supply 240V ac supply to the scheme mentioned in Clause above. In case of failure of ac supply, this relay shall initiate visual and audible annunciation. This annunciation shall operate on annunciator DC and buzzer shall sound.

6 TESTS :

The equipment offered should have been successfully type tested at NABL accredited laboratories for following tests in line with the relevant standard and technical specification, within the last 5 (five) years from the date of offer.

The design of circuit breaker shall be proven through all the routine and in accordance with IEC 62271-100 / 200 / IS 13118: 1991 and any amendment thereof. Photocopy of all the test reports must be enclosed with the tender. Type test report earlier than 5 years from the date of tender opening shall not be acceptable. The bidder shall be required to submit complete set of the following type test reports alongwith the offer.

TYPE TESTS:

a) Lightning Impulse Voltage withstand Test.
b) H.V. dry 1 min power frequency withstand test.

c) *Short time and peak withstand current test.*
d) *Short circuit test with basic duties.*
e) *Single phase breaking capacity test.*
f) *Temperature Rise test.*
g) *Seismic Level Test.*

Circuit Breaker: *Each circuit breaker shall be fully type tested as per IEC 62271 - 100/200, including the following tests:*

a) *Short time and peak withstand current test.*
b) *Short circuit breaking capacity and making capacity.*
c) *Capacitive current switching test : Cable charging current breaking test (Ur less than or equal to 52 kV).*
d) *Dielectric test i.e., power frequency withstand and impulse withstand test.*
e) *Temperature rise test.*
f) *Mechanical Endurance Test at ambient temperature.*
g) *Measurement of resistance of the main circuit.*
h) *Internal arc test (ALFR).*

Current Transformer:

a) *Short Time Current Test.*
b) *Impulse Voltage Withstand Test.*
c) *Temperature Rise Test*

Potential Transformer

a) *Impulse Voltage Withstand Test*
b) *Temperature Rise Test*

Switchgear Panel

a) *IP 4X Test*

7 INSPECTION:

The inspection may be carried out by the purchaser at any stage of manufacture. The contractor/manufacturer shall grant free access to the purchaser's representative/s at a reasonable notice when the work is in progress. Inspection and acceptance of any equipment under this specification by the purchaser shall not relieve the supplier of his obligation of furnishing equipment in accordance with the specification and shall not prevent subsequent rejection if the equipment is found to be defective.

The supplier shall keep the purchaser informed in advance, about the manufacturing program so that arrangement can be made for stage inspection.

The purchaser reserves the right to insist for witnessing the acceptance/routine testing of the bought out items. The supplier shall keep the purchaser informed, in advance, about such testing program.

8 PERFORMANCE GUARANTEE:

All equipment supplied against this specification shall be guaranteed for a period of 66 months from the date of receipt at the consignees stores centers or 60 months from the date of commissioning, whichever is earlier. However, any engineering error, omission, wrong

provision, etc. which do not have any effect on the time period shall be attended to as and when observed/pointed out without any price implication.

9 DRAWINGS & DOCUMENTATION

9.1 The successful tenderer shall submit 3 sets of complete drawings alongwith detailed bill of materials for approval. If any modifications are required on these, the same will be conveyed to the supplier who shall modify the drawings accordingly and furnish final drawings for approval. **No delivery extension shall be granted for any delay in drawing submission.**

a) List of drawings to be submitted alongwith the offer are as under:

i. GA of indoor 11 panel Switchgear.
ii. Typical single line diagram for 11 panel Switchgear.
iii. Sectional view of incomer, bus coupler & feeder panels.
iv. GA of Circuit Breaker truck.
v. GA of Current Transformer
vi. GA of Potential Transformer.
vii. G. A. Drawing for Control Desk.
viii. Bill of material for complete switchgear.
ix. Technical particulars of Switchgears.

b) Successful tenderer shall furnish all above drawings and following additional drawings for approval before commencement of supply.

i. Foundation details.
ii. Equipment door layout for incomer, bus coupler & feeder panels.
iii. Schematic Diagram for incomer bus coupler & feeder section of Switchgear
iv. Protection Circuit for incomer bus coupler & feeder section of Switchgear
v. DC control circuit for incomer, bus coupler & feeder section.
vi. Metering circuit for incomers, bus coupler & feeder section.
vii. Annunciator and Alarm scheme.
viii. P.T. supply change over scheme.
ix. Terminal block details for incomer, bus coupler & feeder section.
x. Cross section view for CTs.
xi. Name Plate & Connection diagram for CTs.
xii. Cross section view for PTs.
xiii. Name Plate & Connection diagram for PTs.
xiv. Schematic Diagram for Control Desk.
xv. G. A. Drawing for Chair.
xvi. G. A. Drawing for Sliding Door Unit.

9.2 The manufacturing of the equipment shall be strictly in accordance with the approved drawings and no deviation will be permitted without the written approval of the MePTCL. All manufacturing and fabrication work in connection with the equipment prior to the approval of the drawings shall be at the suppliers risk.

9.3 After approval of the drawings and bills of materials, the suppliers shall submit detailed packing lists for approval. After approval, copies of these packing lists shall be forwarded to the respective consignees.

9.4 Six set of final drawings, bill of materials, wiring schedules, technical literature and commissioning manuals shall invariably be forwarded to the consignee alongwith the each

panel consignment, and shall be listed out in the packing list when submitted for approval. All drawings shall preferably be of A3 size. In case the supplier fails to furnish contractual drawings and manuals even at the time of supply of equipment, the date of furnishing of drawings/manuals will be considered as the date of supply of equipment for the purpose of computing penalties for late delivery.

10 **PACKING AND FORWARDING**

10.1 The equipment shall be packed in crates suitable for vertical/horizontal transport as the case may be and the packing shall be suitable to withstand handling during the transport and outdoor storage during transit. The supplier shall be responsible for any damage to the equipment during transit, due to improper and inadequate packing. The easily damageable materials shall be carefully packed and marked with the appropriate caution symbols. Wherever necessary, proper arrangement for lifting, such as lifting hooks etc. shall be provided. Any material found short inside the packing cases shall be supplied by the supplier without any extra cost.

10.2 Each consignment shall be accompanied by a detailed packing list containing the following information :

a. Name of the consignee
b. Details of consignment.
c. Destination
d. Total weight of consignment
e. Sign showing upper/lower side of the crate.
f. Handling and unpacking instructions.
g. Bill of material indicating contents of each package.

10.3 All the equipment covered in this specification shall be delivered to the various consignees of the MePTCL as will be intimated to the successful tenderers. The equipment shall be delivered to the consignees only by road transport, and shall be suitably packed to avoid damages during transit in the case of indigenous supplies.

10.4 The tenderers shall quote delivery periods for various equipment, and shall stick-on to the committed delivery. The delivery period shall be counted from the date of issue of detailed purchase order. It may clearly be noted that the delivery periods will under no circumstances be linked up with other formalities like drawing approval, etc. It is therefore the responsibility of the successful tenders to submit the drawings, bill of materials, packing lists, etc. in time and get these approved.

11 **COMMISSIONING CHECKS / TESTS :**

10.1 After installation of panels, power and Control wiring and connect Contractor shall perform commissioning checks. as listed below to proper operation of switchgear/panels and correctness of all respects.

10.2 In addition the Contractor shall carry out all other checks and tests recommended by the manufacturers.

10.2.1 **General :**

i) Check name plate details according to specification.
ii) Check for physical damage.
iii) Check tightness of all bolts, clamps and connecting terminal.

iv) *Check earth connections.*
v) *Check cleanliness of insulators and bushings.*
vi) *Check heaters are provided.*
vii) *H.V. test on complete switchboard with CT & breaker/ contractor lubricated in position.*
viii) *Check all moving Parts are properly lubricated.*
ix) *Check for alignment of busbars with the insulators to ensure alignment and fitness of insulators.*
x) *Check for inter changeability of breakers.*
xi) *Check continuity and IR value of space heater.*
xii) *Check earth continuity of the complete switchgear board.*

10.2.2 **Circuit Breaker :**

i) *Check alignment of trucks for free movement.*
ii) *Check correct operation of shutters.*
iii) *Check slow closing operation (if provided).*
iv) *Check control wiring for correctness of connections, continuity and IR values.*
v) *Manual operation of breakers completely assembled.*
vi) *Power closing/opening operation, manually and electrically at extreme condition of control supply voltage.*
vii) *Closing and tripping time.*
viii) *Trip free and anti-pumping operation.*
ix) *IR values, resistance and minimum pick up voltage of coils.*
x) *Simultaneous closing of all the three phases.*
xi) *Check electrical and mechanical inter locks provided.*
xii) *Checks on spring charging motor, correct operation of limit switches and time of charging.*
xiii) *Check vacuum (as applicable).*
xiv) *All functional checks.*

10.2.3 **Current Transformers :**

i) *Megger between windings and winding terminals to body.*
ii) *Polarity tests :*
   a. *Ratio identification checking of all ratios on all cores by primary injection of current.*
   b. *Magnetization characteristics & secondary winding resistance.*
iii) *Spare CT cores, if any to be shorted and earthed.*

10.2.4 **Voltage Transformers :**

i) *Insulation resistance*
ii) *Ratio test on all cores.*
iii) *Polarity test*
iv) *Line connections as per connection diagram.*

10.2.5 **Cubicle Wiring :**

i) *Check all switch developments.*

ii) *It should be ensured that the wiring is as per relevant drawings. All interconnections between panels shall similarly be checked.*

iii) *All the wires shall be meggered to earth.*

iv) *Functional checking of all control circuit e.g. closing, tripping, interlock, supervision and alarm circuit including proper functioning of component/ equipment .*

v) *Check terminations and connections. To check wiring related to CT and PT circuits, carryout primary injection and then check for secondary value at relay and metering instrument terminals.*

vi) *Wire ducting.*

vii) *Gap sealing and cable bunching*

10.2.6 **Relays :**

i) *Check internal wiring.*

ii) *Megger all terminal body.*

iii) *Megger AC to DC terminals*

iv) *Check operating characteristics by secondary injection.*

v) *Check minimum pick up voltage of DC coils.*

vi) *Check operation of electrical targets.*

vii) *Check CT connections with particular reference to their polarities for differential type relays.*

viii) *Relay settings.*

10.2.7 **Meters :**

i) *Megger all insulated portion.*

Check CT & VT connections with particular reference to their polarities for power type meter

SYNCHRONISING TROLLEY PANELS

Section - 3

Section 3 - Purchaser's Requirements

This Section contains the Technical Requirements and supplementary information that describe the Goods and Related Services

Table of Contents

3.1.0 SCOPE .....

3.2.0 SERVICE CONDITIONS.....

3.3.0 TYPE TEST REPORTS .....

3.4.0 GUARANTEED TECHNICAL PARTICULARS .....

3.5.0 TECHNICAL SPECIFICATION OF NUMERICAL RELAY.....

3.6.0 ERECTION, TESTING AND COMMISSIONING .....

Annexure – 1 Guaranteed and Other Technical Particulars.....

Section 3

Purchaser's Requirements

3.1.0. GENERAL SCOPE

The brief description of scope covered under this Bidding Document is furnished below:

a) Design, manufacture, testing at manufacturers works of Synchronising Trolley Panels with all fittings and accessories including mounting structures as applicable.

b) Loading at manufacturer's works, transportation and delivery at respective substation sites, including unloading at destination sites.

c) The bidder shall submit their offer for the above, as well as, for Installation, Testing and Commissioning of Synchronising Trolley Panels.

d) The scope of work may be reduced at the time of deciding tender and no claims arising out of reduction in the scope of work shall be entertained by the MePTCL. However, the bidder shall be bound to execute the scope of work, to be described by the MePTCL at the same rate, terms and condition.

e) The works to be done in the grid sub-station shall be as per Price Schedule and interlaid generally include:

- Supply, erection, testing & commissioning of new equipment as required / specified
- All control cables for new equipment etc will have to be laid as and where applicable.
- Any other works not included in the specification but necessary for completion of the works to be proposed by the tenderer.

f) This work included the joint survey of the site for assessment of existing works as per requirement as and where applicable.

g) The intent of this specification is detailed engineering, manufacture, preparation of all drawings, execution etc as detailed in the specification as per approved drawing.

h) The tenderer shall include in the total cost of his tender the cost of delivery of the whole of the plant and materials for delivery at the site including all taxes duties, insurance, freight etc as well as dismantling, packing, loading, transportation, unloading and handling over to store

i) The contractor shall provide suitable erection, supervision personnel to supervise the work of erection of the equipment under taken by him / them.

j) This also includes the supply, delivery, installation, testing and commissioning of all

necessary parts and equipments including supply, delivery and erection of structures, etc., required for successful commissioning works.

k) All clearances, if necessary shall be the responsibility of the contractor. All expenditures towards the above shall be borne by the tender / contractor. However, MePTCL shall extend all assistance in obtaining the clearance from the Govt. Deptt.

l) The scope of work shall include all works as detailed in the price schedule of the tender specification.

m) It shall also be the responsibility of the Contractor to obtain any road permits and any other permits or licenses to execute the works assigned to them.

n) During technical scrutiny of the bid purchaser may ask to give demonstration of the equipment. The bidder shall demonstrate the same within two weeks of intimation from purchaser. The purchaser will evaluate the suitability of product for their application, present practice & test equipment used. Based on demonstration, the purchaser decision will be last & unchallenged for acceptance/ non acceptance of product even if product will comply bid's other terms.

o) The successful bidder shall have to provide filed demonstration /training at site at 2 or 3 locations, as decided by MePTCL, to MePTCL staff where Synchronization Trolley Panel is to be supplied. The training shall cover familiarization with techniques & procedures of installation, testing, commissioning, operation of software, creation of database and trouble shooting of Synchronization Trolley Panel.

p) The program of the training shall be mutually discussed and finalized by the purchaser with suppliers.

3.2.0. SERVICE CONDITIONS

The plant and materials supplied shall be suitable for operation under the following climatic and other conditions:

a)	Peak ambient day temperature in still air		: 40°C
b)	Minimum night temperatures		: -5°C
c)	Reference ambient day temperature		: 45°C
d)	Relative Humidity a)	Maximum	: 89 %
	b)	Minimum	: 62 %
e)	Altitude		: 1000 M above MSL and above

f) Maximum wind pressure : As per IS: 802 latest code.

g) Seismic Intensity : ZONE-V as per IS 1893.

3.3.0. TYPE TEST REPORTS

Equipment, which has never been tested for critical performance, shall not be accepted. In such cases, a promise or agreement by a bidder to have the equipment tested after award of a contract is not acceptable.

All Bids must be accompanied by the full Type Test Certificates of equipment offered. Such type test certificates shall be acceptable only if:-

(a) Tests are conducted in an independent and NABL accredited testing laboratory, or

(b) Tests are conducted in manufacturer's own laboratory. In this case (i) the laboratory must have ISO 9000 (or its equivalent) series certification; and (ii) tests have been witnessed by technically qualified representatives of earlier clients or purchaser.

Test reports to be acceptable must be related directly to the materials offered. Test reports for higher class of equipment are acceptable with commitment to perform the type tests free of any charge on the particular equipment(s) after the award of contract.

Type Test Reports older than five (5) years on the date of Technical bid opening shall not be accepted.

This clause has reference to bid document Clause 2.3.3, Appedix-2 of ITB, Section-1, 'Evaluation and Qualification Criteria'.

3.4.0. GUARANTEED TECHNICAL PARTICULARS

The Guaranteed Technical Particulars of the various items shall be furnished by the Bidders in the prescribed Schedules of this Section with the Technical Bid. The Bidder shall also furnish any other information's as in their opinion is needed to give full description and details to judge the item(s) offered by them.

The data furnished in Guaranteed Technical Particulars should be the minimum or maximum value (as per the requirement of the specification) required. A Bidder may guarantee a value more stringent than the specification requirement. However, for testing purpose or from performance point of view, the material shall be considered

performed successfully if it achieves the minimum/maximum value required as per the

technical specification. No preference what so ever shall be given to the bidder offering better/more stringent values than those required as per specification except where stated otherwise.

3.5.0. TECHNICAL SPECIFICATION OF SYNCHRONISING TROLLEY PANEL

SYNCHRONISING EQUIPMENT

1. The synchronizing instruments shall be mounted on a synchronizing trolley for use in 132 KV system. Synchronization shall be achieved by comparing between phase to neutral voltage. The trolley shall be equipped with double analog voltmeters and double analog frequency meters, synchroscope and lamps fully wired.. Suitable auxiliary voltage transformers wherever necessary shall also be provided for synchronizing condition.
2. In case the synchroscope is not continuously rated, a synchroscope cutoff switch shall be provided and an indicating lamp to indicate that the synchroscope is energised, shall also be provided.
3. Synchronising check relay with necessary ancillary equipment's shall be provided which shall permit breakers to close after checking the requirements of synchronising of incoming and running supply. The phase angle setting shall not exceed 35 degree and have voltage difference setting not exceeding 10%. This relay shall have a response time of less than 200 milliseconds when the two system conditions are met within present limits and with the timer disconnected. The relay shall have a frequency difference setting not exceeding 0.45% at rated value and at the minimum time setting. The relay shall have a continuously adjustable time setting range of 0.5-20 seconds. A guard relay shall be provided to prevent the closing attempt by means of synchronising check relay when control switch is kept in closed position long before the two systems are in synchronism.
4. The synchronising panel shall be draw out and swing type which can be swiveled in left and right direction. The synchronising panel shall be placed along with control panels in the sub station and the number of sub stations is as indicated in BPS. The incoming and running bus wires of VT secondary shall be connected and run as bus wires in the control panels and will be extended to synchronising panel for synchronisation of circuit breakers. The selector switch provided for each circuit breaker in respective control panels shall be lockable type with a common key so that only one selector switch is kept in synchronising mode at a time.
5. Alternatively, the trolley shall be of mobile type with four rubber-padding wheels capable of rotating in 360 degree around the vertical axis. Suitable bumpers with rubber padding shall be provided all around the trolley to prevent any accidental damage to any panel in the

control room while the trolley is in movement. The trolley shall have two meter long flexible cord fully wired to the instruments and terminated in a plug in order to facilitate connecting the trolley to any of the panels. The receptacle to accept the plug shall be provided on the panel.

INDICATIVE LIST OF MAJOR DEVICES MOUNTED IN SYNCHRONISING TROLLEY

The trolley shall be equipped with –

a) Two voltmeters for running & incoming, each having scale suitable for 132 KV system and also suitable for operation with CVT secondary voltage of 110v phase to phase.

b) Two frequency meters each having scale range 45 to 55Hz, indicating type.

c) One suitable synchroscope with cut – off switch.

d) One suitable auxiliary voltage transformer for synchronizing condition.

e) One synchronizing bypass switch with necessary under voltage relaying scheme of running system and incoming system to check inadvertent circuit breaker closing under synchronizing bypass condition.

f) One check synchronizing relay with necessary auxiliary equipment which shall permit the circuit breaker to close after checking the requirement of synchronizing of incoming and running supply.

g) One guard relay to prevent the closing attempt by means of synchronising check relay when control switch is kept in close position long before the two systems are in synchronism.

h) Two synchronizing lamps of white colour.

i) One green indicating lamp to indicate check synchronism in limit.

j) One red indicating lamp to indicate check synchronism by pass.

k) Any other equipment required to render satisfactory operation of synchronism

NOTES: This list is indicative and meant for general guidance of the bidder only.

3.6.0. ERECTION, TESTING AND COMMISSIONING

The purchaser may at his discretion ask the bidder to do either the complete erection or supervision of erection at site of the equipment covered by this specification. However, if it is decided to do the erection of the above equipment departmentally, the bidder shall furnish full and detailed instructions complete with drawings and leaflets to enable the satisfactory erection and commissioning of the equipment by the purchaser. Such instructions shall reach the purchaser well in advance so that there is no delay in

commencement of erection. The successful bidder shall supply all special tools necessary for erection. Details of such tools and the price thereof shall be stated in the tender separately.

Bidder shall note that under the scope of this bid, the synchronising trolley panels shall be supplied, erected and commissioned in respective substations.

All necessary supports shall be provided by the successful bidder in this regard.

The Supplier/manufacturer shall be given a prior 15 (fifteen) days notification when an equipment is ready for installation, testing and commissioning. If the supplier/manufacture fails to turn up by the appointed date, the Purchaser may go ahead with the task of erection, testing & commissioning on its own. However, the Supplier/Manufactures shall bear all the responsibilities and cost of any consequences that may arise due to his absence.

TIME SYNCHRONISING EQUIPMENTS

Section - 3

Purchaser's Requirements

Section 3 - Purchaser's Requirements

This Section contains the Technical Requirements and supplementary information that describe the Goods and Related Services

Table of Contents

3.1.0 SCOPE .....

3.2.0 SERVICE CONDITIONS.....

3.3.0 TYPE TEST REPORTS .....

3.4.0 GUARANTEED TECHNICAL PARTICULARS .....

3.5.0 TECHNICAL SPECIFICATION OF NUMERICAL RELAY.....

3.6.0 ERECTION, TESTING AND COMMISSIONING .....

Annexure – 1 Guaranteed and Other Technical Particulars.....

Section 3

Purchaser's Requirements

3.1.0. GENERAL SCOPE

The brief description of scope covered under this Bidding Document is furnished below:

a) Design, manufacture, testing at manufacturers works of Time Synchronising Equipments with all fittings and accessories including mounting structures as applicable.

b) Loading at manufacturer's works, transportation and delivery at respective substation sites, including unloading at destination sites.

c) The bidder shall submit their offer for the above, as well as, for Installation, Testing and Commissioning of Time Synchronising Equipments.

d) The scope of work may be reduced at the time of deciding tender and no claims arising out of reduction in the scope of work shall be entertained by the MePTCL. However, the bidder shall be bound to execute the scope of work, to be described by the MePTCL at the same rate, terms and condition.

e) The works to be done in the grid sub-station shall be as per Price Schedule and interlaid generally include:

- Supply, erection, testing & commissioning of new equipment as required / specified
- All control cables for new equipment etc will have to be laid as and where applicable.
- Any other works not included in the specification but necessary for completion of the works to be proposed by the tenderer.

f) This work included the joint survey of the site for assessment of existing works as per requirement as and where applicable.

g) The intent of this specification is detailed engineering, manufacture, preparation of all drawings, execution etc as detailed in the specification as per approved drawing.

h) The tenderer shall include in the total cost of his tender the cost of delivery of the whole of the plant and materials for delivery at the site including all taxes duties, insurance, freight etc as well as dismantling, packing, loading, transportation, unloading and handling over to store

i) The contractor shall provide suitable erection, supervision personnel to supervise the work of erection of the equipment under taken by him / them.

j) This also includes the supply, delivery, installation, testing and commissioning of all

necessary parts and equipments including supply, delivery and erection of structures, etc., required for successful commissioning works.

k) All clearances, if necessary shall be the responsibility of the contractor. All expenditures towards the above shall be borne by the tender / contractor. However, MePTCL shall extend all assistance in obtaining the clearance from the Govt. Deptt.

l) The scope of work shall include all works as detailed in the price schedule of the tender specification.

m) It shall also be the responsibility of the Contractor to obtain any road permits and any other permits or licenses to execute the works assigned to them.

n) During technical scrutiny of the bid purchaser may ask to give demonstration of the equipment. The bidder shall demonstrate the same within two weeks of intimation from purchaser. The purchaser will evaluate the suitability of product for their application, present practice & test equipment used. Based on demonstration, the purchaser decision will be last & unchallenged for acceptance/ non acceptance of product even if product will comply bid's other terms.

o) The successful bidder shall have to provide filed demonstration /training at site at 2 or 3 locations, as decided by MePTCL, to MePTCL staff where Synchronization Trolley Panel is to be supplied. The training shall cover familiarization with techniques & procedures of installation, testing, commissioning, operation of software, creation of database and trouble shooting of Synchronization Trolley Panel.

p) The program of the training shall be mutually discussed and finalized by the purchaser with suppliers.

3.2.0. SERVICE CONDITIONS

The plant and materials supplied shall be suitable for operation under the following climatic and other conditions:

a)	Peak ambient day temperature in still air		: 40°C
b)	Minimum night temperatures		: -5°C
c)	Reference ambient day temperature		: 45°C
d)	Relative Humidity a)	Maximum	: 89 %
	b)	Minimum	: 62 %
e)	Altitude		: 1000 M above MSL and above

f) Maximum wind pressure : As per IS: 802 latest code.

g) Seismic Intensity : ZONE-V as per IS 1893.

3.3.0. TYPE TEST REPORTS

Equipment, which has never been tested for critical performance, shall not be accepted. In such cases, a promise or agreement by a bidder to have the equipment tested after award of a contract is not acceptable.

All Bids must be accompanied by the full Type Test Certificates of equipment offered. Such type test certificates shall be acceptable only if:-

(a) Tests are conducted in an independent and NABL accredited testing laboratory, or

(b) Tests are conducted in manufacturer's own laboratory. In this case (i) the laboratory must have ISO 9000 (or its equivalent) series certification; and (ii) tests have been witnessed by technically qualified representatives of earlier clients or purchaser.

Test reports to be acceptable must be related directly to the materials offered. Test reports for higher class of equipment are acceptable with commitment to perform the type tests free of any charge on the particular equipment(s) after the award of contract.

Type Test Reports older than five (5) years on the date of Technical bid opening shall not be accepted.

This clause has reference to bid document Clause 2.3.3, Appedix-2 of ITB, Section-1, 'Evaluation and Qualification Criteria'.

3.4.0. GUARANTEED TECHNICAL PARTICULARS

The Guaranteed Technical Particulars of the various items shall be furnished by the Bidders in the prescribed Schedules of this Section with the Technical Bid. The Bidder shall also furnish any other information's as in their opinion is needed to give full description and details to judge the item(s) offered by them.

The data furnished in Guaranteed Technical Particulars should be the minimum or maximum value (as per the requirement of the specification) required. A Bidder may guarantee a value more stringent than the specification requirement. However, for testing purpose or from performance point of view, the material shall be considered performed successfully if it achieves the minimum/maximum value required as per the

technical specification. No preference what so ever shall be given to the bidder offering better/more stringent values than those required as per specification except where stated otherwise.

3.5.0. TECHNICAL SPECIFICATION OF TIME SYNCHRONISING EQUIPMENTS

Technical Specification for GPS Time Synchronization System

I) Master Clock

1. The Time synchronization equipment shall receive the coordinated Universal Time (UTC) transmitted through Geo Positioning Satellite System (GPS) and synchronies equipments to the Indian Standard Time in a substation. The specification is as follows:-

i) GPS Receiver

Timing Accuracy	< 20nsec (with respect to UTC) with selective
availability Positioning Accuracy	<25 m with selective availability (SA) disabled
Tracking	12 parallel channels
Acquisition time	Hot Start < 10 sec
	Warm start < 40sec
	Cold start < 50sec

ii) Antenna

Type	Active L1. GPS, 25dB gain min.
Length	100 mts.
Coverage	360 degree

iii) Built in Interface

Display	2X 20 Character backlit LCD Display
Displayed data	Local / UTC time and date
	Day of the year, days of the week, Position latitude, longitude,
	Status of the GPS receiver

Status LEDs	Power, 1PPS, Watchdog, Event

iv) Outputs (specification)

PPS,PPM,PPH	accuracy +/-1µs with GPS user configurable for Sec, min, hour, day and Connection BNC Female Connector
IRIG-B Modulated	AM -Carrier 1 KHz signal, 3:1 modulation ratio
	BNC Female connector & Accuracy +/-50µs
IRIG-B Modulated	PWM Accuracy +/-10 µs
Serial (RS232	Programmable baud rate, stop and parity bit and message format.
ports COM1)	Serial connection DB-9 Female connector with capability of distance 15m.
NTP (LAN interface)	NTP, SNTP support on TCP, Telnet, IPv4 network, server mode operation @10/100Mbps with accuracy of 1 msec with respect to UTC
Alarm Output	GPS Fail alarm, Potential free contact /Watchdog output

2. It shall be compatible for synchronization of all types of numerical Relays, and Disturbance Recorders, etc. So, offered system shall have at least following no. of output ports:

Potential free contact (PPM):	04Nos.
IRIG-B (Modulated-AM):	04Nos.
IRIG-B (Modulated-PWM):	04Nos.
RS232:	01No.
NTP/SNTP:	02Nos.
Alarm output (potential free):	01No.

3. Supply of Time synchronization equipment shall include GPS master clock, antenna & its mounting kit, Surge protector/ lightning arrestor, all cables and processing equipment, connectors, accessories to make functional. This includes supply of Cables etc. required between various equipments for extending time signals and requirement.

4. GPS should be of NTP standard & should have provision for up gradation in future for IEEE 1588 (PTP) standard by add-on module.

5. Equipment shall operate up to the ambient temperature of 55 degree centigrade and 90% humidity.

6. The system shall be able to track the satellites to ensure no interruption of synchronization signal. It should be able to track 12 parallel channel tracking.

7. The Event output signal from each port shall be programmable at site for either one day, one hour minute or seconds pulse as per requirement. There should also be alarm signal for watchdog, power fail & GPS fail.

8. The equipment shall have a periodic time correction facility of one second periodicity.

9. Time synchronization equipment shall be suitable to operate from 260V DC and 230V AC.

10. Battery back –up with 3V Lithium battery shall be provided as standby power for RTC of GPS Receiver

11. Device should be qualified for following type tests.

S.No	Type test	IEC Standard
1	Electrostatic Discharge Test	IEC61000-4-2
2	EFT TestIEC61000-4-4	
3	Conducted susceptibility (RF)	IEC61000-4-6
4	Power Frequency Magnetic Field	IEC61000-4-8
5	Voltage Interruption	IEC61000-4-11
6	Damped Oscillator Magnetic Field	IEC61000-4-12
7	Radiated Emission Conducted Emission	CISPR-22
8	Dry Heat Test	IEC60068-2-2
9	Damp Heat steady state test	IEC60068-2-30
10	Shock TestIEC60068-21-2	
11	Cold TestIEC60068-2-1	
12	High energy surge test	IEC-61000-4-5

13	Dielectric strength	IEC-60255-5
14	Radiated susceptibility test	IEC-61000-4-3
15	Radiated RF power disturbance test	CISPR-14-1
16	Vibration test	IEC-60068-2-6
17	IP 20 IS-12063	

Supplier shall submit the test report for all the above tests & shall not be older than 5 yrs from the date of PO placement. This test should have been conducted at Govt. approved/ accredited laboratory.

12. A 19" steel rack of 6U size wall mount enclosure shall be supplied for mounting the GPS time synchronization equipment

13. Manufacture Instruction Manual shall be submitted along with supply.

14. Training shall be provided to MePTCL personnel

15. The synchronization equipment shall have accuracy less than 100 nano seconds.

16. Equipment shall give real time corresponding to IST (taking into consideration all factors like voltage and temperature variations, propagation and processing delays etc.)

17. Equipment should have display with HMI to view configured parameters like IP address, offset time etc

18. Time synchronization equipment shall be suitable to operate from the DC available at substation and shall have provision of redundant power supply.

19. Two electrical network ports with PRP support

II) Time display unit

1. A time display unit shall be supplied along with master clock for distance viewing with following Specification

Input	Signal from Master clock [Either RS-485 or Ethernet dedicated]
Output display	6-digit 7-Segment display of Hour, minute and

	second in24 hours format HH:MM:SS, non-glare type
Display size	Minimum 100mm RED
Viewing distance	Minimum 10 meters, non-glare
Mounting	Wall mounting/ panel mounting with support clamps
Enclosure protection	IP55 protected
Time update	Every second
Power supply	230V AC mains with suitable power connector
Signal input	Time signal input from master clock with suitable connector
Environment	0-50 deg C and 90% humidity @ 45deg C

3.6.0. ERECTION, TESTING AND COMMISSIONING

The purchaser may at his discretion ask the bidder to do either the complete erection or supervision of erection at site of the equipment covered by this specification. However, if it is decided to do the erection of the above equipment departmentally, the bidder shall furnish full and detailed instructions complete with drawings and leaflets to enable the satisfactory erection and commissioning of the equipment by the purchaser. Such instructions shall reach the purchaser well in advance so that there is no delay in commencement of erection. The successful bidder shall supply all special tools necessary for erection. Details of such tools and the price thereof shall be stated in the tender separately.

Bidder shall note that under the scope of this bid, the time synchronising equipments shall be supplied, erected and commissioned in respective substations.

All necessary supports shall be provided by the successful bidder in this regard.

The Supplier/manufacturer shall be given a prior 15 (fifteen) days notification when an equipment is ready for installation, testing and commissioning. If the supplier/manufacture fails to turn up by the appointed date, the Purchaser may go ahead with the task of erection, testing & commissioning on its own. However, the

Supplier/Manufactures shall bear all the responsibilities and cost of any consequences that may arise due to his absence.

TECHNICAL SPECIFICATION OF PLCC

1. *GENERAL INFORMATION*:

1.1 *SCOPE:*

This specification provides for Frequency Planning, Co-ordination with other suppliers" equipment, design, manufacture, inspection, testing at manufacturers works packing and supply at site including transportation, erection, testing and commissioning of equipment as specified herein for Power Line Carrier Communication equipment complete for speech communication in dialing mode and / or through 4 wire Express Telephone, data communication and transmission line protections including coupling equipment, Battery & Battery Charger for for 400 KV, 220KV& 132KV Transmission Lines as mentioned in Annexure-AI and as per schematic/layout drawing. All communication equipment shall be suitable for good quality voice communication among all new & existing Sub- Stations & SLDC Howrah and also data communication with SLDC Howrah. Brief scope of work as mentioned in Annexure AI is also under scope of work of vendor.Regarding the stations where PLCC equipment are already in operation, the contractor shall be responsible for co-ordinating the equipment supplied by them with the existing PLCC equipment in the said stations. However, any other work not specified but felt necessary for successful commissioning of trouble free operation of carrier aided protection, speech & data communication system as per approved scheme are also within the scope of the work.

1.2 *CLIMATIC CONDITION*:

The equipment to be supplied under this specification shall be suitable for satisfactory operation under following climatic condition:

a) Maximum Ambient Temperature in shade	:	50° C
b) Maximum Temperature under hot Sun	:	60° C
c) Minimum Ambient Temperature in shade	:	4° C
d) Daily Average Ambient Temperature	:	45° C
e) Average no. of thunder storm days per annum	:	75
f) Average rainfall per annum	:	2000 mm
g) Maximum relative humidity	:	100%
h) Height above sea level	:	1000 meters
i) Maximum Wind Pressure	:	150 Kg/m^2
j) Basic horizontal seismic co-efficient	:	0.04
k) Average number of months during which tropical monsoon conditions prevail	:	4 1/2 months

1.2.1. The atmosphere is to be considered as laden with industrial and town gas and dust in suspension during dry months. Fog, smoke and mild acid are also present.

1.3 *STANDARDS :*

The equipment shall conform to the following latest Edition of the Indian Standards as amended up to date and as per latest relevant I.E.Cs. :

The details are given below :

1. I.E.C. Publication No.353 for line trap.
2. IS Publication No.8792 for line trap.
3. I.E.C. Publication No.481 for coupling devices.

4.	I.E.C. Publication No.495	for power line carrier terminals.
5.	I.S. Publication No.8997	for coupling devices.
6.	I.S. Publication No.3156	for C.V.T.
7.	I.E.C. Publication No.358	for C.C. & CVT
8.	I.S. Publication No.9348	for coupling capacitor.
9.	I.S. Publication No.11967	for Co-axial Cable
10.	I.E.C. Publication No.663	for Planning of SSB PLCC system.
11.	I.E.C. Publication No.99	for Surge Arrestors
12.	I.E.C. Publication No.96	for HF Cable
13.	I.E.C. Publication No.834-I Part-I	for Performance and Testing of Tele-protection equipment.
14.	I.S. Publication No.9428	for Characteristic values of Inputs and outputs of single side band PLC terminals.
15.	I.S. Publication No.9528	for frequency planning of power line carrier equipments.

1.4 ***LOCATION OF EQUIPMENT:***

1.4.1. The PLCC equipment and Wave Traps shall be installed at the respective ends of the transmission lines as stated in section 1.1. The contractor shall be responsible for co-coordinating the equipment supplied by them with the already existing carrier equipment at the respective Sub-Station.

1.5. ***PROPOSED ARRANGEMENT:***

1.5.1. The power line carrier communication equipment required by the owner is to provide primarily efficient, secure and reliable information link for carrier aided protection for both direct and permissive tripping of remote-end breaker and also for speech & data communication between 400KV, 220KV & 132KV Sub-Stations.

It shall include separate terminals for speech and protection purpose. Provision for superimposing channels for telemetering& protection signals shall be made on the speech terminals.

1.5.2. The proposed 400KV lines shall have connected shunt reactors if necessary at one/both ends. The switching off of local breaker keeps the reactor and line charged. In the event of reactor fault both the breakers must be tripped immediately and as fast as possible to save not only the system but also the equipment. Further opening of 400KV remote end breakers would cause severe voltage rise in dynamic condition and may cause damage due to ferro-resonance. This will require immediate opening of local breaker under carrier aided direct tripping command from remote end.

1.5.3. For security reasons each 400KV transmission line shall be protected as given

below: Main-I: Numerical distance protection with permissive inter-tripping.
Main-II: Numerical distance protection of a relay with permissive inter-tripping.

Thus, there shall be 2 (two) pairs of PLC Terminals with protection couplers for each circuit.

Further, there shall be 1 (one) pair of PLC terminals for speech and telemetering for each circuit of the D/C line.

1.5.4. For list of equipment Quantity Schedule may be referred to.

1.5.5. The protection signaling equipment shall be suitable for direct and permissive tripping of remote end breaker. It shall provide transmission and reception facilities for minimum of 2 (two) protection signals per terminal.

1.5.6. The equipment for protection signals shall have high degree of reliability and speed. It shall be guaranteed to function reliably in the presence of noise impulse caused by isolator or breaker operation. The equipment shall be suitable for direct tripping of remote end breaker for fault in unswitched 400KV shunt Reactor & operation of Buchholz relays of reactor. It shall also be possible to effect direct tripping of breaker of sending end when receiving end breaker opens cut either manually or by relays such as Bus fault relay etc.

1.5.7. The time interval between receipt of a trip command by the carrier relay on the transmit side, & giving command to the trip relays at the distant end shall not exceed 25 m Sec. even for the longest line section. The above timing is inclusive of operating time for auxiliary relays and interposing relays, if any, included in the PLCC equipment.

1.5.8. The requirement of protection signaling channel, is such that security against incorrect signals being received shall be at least two orders higher than reliability against a signal not being received.

1.5.9. Requirement under speech and data communication elaborated in clause-6.

1.5.10. For reasons of reliability and because of relatively long line section, phase to phase coupling between adjacent phase i.e. either R-Y or Y-B shall be employed throughout. This shall, however, be fully confirmed by Bidder after conducting detailed computer study taking into account the transposition of 400KV lines for optimum coupling mode over these line sections. The coupling arrangement shall be fully optimized by the bidder after conducting detailed computer range study of every line section individually, taking into account the temperature variations, transpositions, earth resistivity, conductor configuration and other relevant details. Line attenuation shall be calculated at different frequencies for the following values of earth resistivity.

i)	30 Ohm	-	metre
ii)	100 Ohm	-	metre
iii)	200 Ohm	-	metre
iv)	300 Ohm	-	metre
v)	1000 Ohm	-	metre

1.5.11. The bidder shall have to check and prove through field test for phase combination in addition to his computer studies that attenuation due to transposition in the line is minimum out of all possible phase combinations within limits and the offered equipment will perform satisfactorily within limits of attenuation..

1.5.12. Further more, the bidder shall submit curves illustrating “failure to trip probability “ plotted against corona noise level in the presence of impulse noise due to switching of isolator and circuit breaker etc. Details of field tests and laboratory test for successful operation of this equipment under such adverse condition shall be furnished by the Bidder. These are to be related to end to end signaling and shall take into account the type of communication link. Details of field test and laboratory test for successful operation of the equipment under the above circumstances shall be submitted by the bidder illustrating the above parameters.

1.6 ***FREQUENCY PLANNING;***

1.6.1 The contractor shall be responsible for doing the carrier frequency planning for these PLC links.

1.6.2 The equipment to be supplied by the contractor shall be complete with H.F hybrid permitting adjacent channel working.

1.6.3 The carrier frequency plan should be prepared within one month of receipt of the frequency details of the existing PLCC Network from the Board. The contractor will submit detailed calculations with his frequency plan and also the recommendations regarding the line traps based upon his frequency planning.

1.6.4 The carrier frequency plan recommended by the contractor will be submitted for approval of Wireless Adviser/PTCC, New Delhi if required as per existing rules. In case any change is proposed by those authorities in the recommended carrier frequency plan, the contractor will have to modify his studies and proposal accordingly to suit their requirement.

1.7 ***INTERCONNECTION DETAILS FOR TELE-PROTECTION****:*

1.7.1 Contractor should provide interconnection details between the protection coupler and the existing distance protection system at concerned sub-station.

1.8 GUARANTEED TECHNICAL PARTICULARS:

The bidder shall submit the Guaranteed Technical Particulars of the equipment in accordance with „Guaranteed Technical Particulars Format" furnished by MePTCL separately.

2 DRAWINGS AND TECHNICAL LITERATURE AND SPARES :

2.1 ***DRAWINGS AND TECHNICAL LITERATURE :***

For the purpose of submission of Tender, the following Drawings and Technical Literature in Triplicate shall be submitted by the bidder along with the Tender:

a) Detailed Drawing of each equipment showing Block Diagram, Plan, Elevation and Side view with all dimensions and weight.
b) Schematic drawing of complete installation of equipment at each substation.
c) Technical Literature covering details of erection, operation, maintenance and technical particulars of each equipment.
d) Technical Literature furnishing principle of operation and detailed Circuit Diagrams of Equipment wherever applicable.

2.2 ***SPARES:***

Bidder to ensure that for all equipment, provision for supply of spares in future will be at least for another 15(fifteen) years.

3 TECHNICAL SPECIFICATION OF PLCC EQUIPMENT:

3.1 **LINE TRAPS:**

Line traps are used in high voltage transmission line to minimize undue loss of the carrier signal in the power station networks. Its impedance shall be negligible at power frequency (50 HZ) so as not to disturb the power transmission but must be relatively high over any frequency band appropriate to carrier transmission.

The coil of line trap shall be designed to tolerate the short circuit current of the line for a short period and shall withstand the mechanical stress resulting from it. HF tuning elements shall be placed in a separate sealed unit.

Line traps are to be tuned for a carrier frequency band which will depend upon the operating carrier frequency pair. Line traps are to be supplied of broad band tuned type.

A resistor shall be added in the tuning elements of the Trap. The resistive component of impedance of the line trap within its bandwidth shall not be less than 450 ohms. for lines with twin conductor per phase (400 KV lines) and shall not be less than 570 ohms. for lines with single conductor per phase (220 KV &132KV lines).

The line trap shall be provided with a protective device which will be designed and arranged so that neither significant alternation in its protective function nor physical damage shall result from either temperature rise of the magnetic field of the main coil at continuous rated current or rated short time current. The protective device shall neither enter into operation or remain in operation following transient actuation by the power frequency voltage developed across the line trap by the rated short time current. The protective devices in the form of lightning arrestor shall be shunt connected to the main coil and the tuning device.
For proper co-ordination with the lightning arrestors installed in the substation the line traps shall be provided with protective device with normal discharge current of 10 KA.

Short duration current rating of the wave trap is the maximum rms. values of the current in KA whose thermal effect, the wave trap shall withstand for a period of one second following a continuous loading at normal rating under standard thermal conditions. The asymmetrical peak value of the first half wave of the rated short time current shall be assumed to be 2.55 times the rms. value. Line traps should conform to the following short time ratings: -

	400 KV	***220 KV***	***132KV***
(a)Normal rating in Amps.	*2000/3150 (for* One & a Half Breaker GIS)	*1250*	*1250*
(b)Short duration current in KA	*50*	*40*	*40*
(c)First current amplitude in KA	*125*	*100*	*100*

The line trap should be outdoor type suitable for being mounted on the top of an insulated structure for 400 KV& 220KV lines and suspension mounted for 132KV lines. This should be mechanically strong to withstand the stresses due to maximum wind pressure of 1500 pa. The insulated structure for 400KV & 220KV lines and suspension mounting arrangementfor 132KV lines should be included in offer.

Line traps shall also conform to the following technical particulars:

		400 KV	220 KV	132KV
(a)	Normal system voltage (KV)	400	220	132
(b)	Maximum system voltage on which line traps are to be used (KV)	420	245	145
(c)	Rated continuous current (Amps)	2000/3150	1250	1250
(d)	Minimum resistive components of Impedance within the Bandwidth (ohms)	450	570	570
(e)	Rated inductance (nett) in mH.	1	1	1
(f)	Visual corona Extinction Voltage (KV rms).	320	-	-
(g)	Radio Interference voltage	Not exceeding 500 uV		
(h)	Blocking Band	(50-500 KHz)		

The bidder shall provide clamps suitable for connecting the line trap to the appropriate ACSR conductor of the H.T. line and substation equipment.

The bidder shall provide clamps suitable for connecting the line trap to the appropriate ACSR conductor of the HT line and substation equipment.

The bidder shall offer 1 mH line traps and shall specify various band width for minimum resistive component of impedance being not less than 450 ohms.(for 400 KV lines) & 570 ohms.(for 220 KV& 132KV lines).

The bidder shall also specify the bandwidth of the untuned line traps within which the tapping loss shall not exceed 2.6 dB. For this tapping loss the characteristic impedance of the H.T. line (phase to earth of a single conductor line) may be assumed to be 320 ohms. for 400 KV, 220KV & 132KV lines.

The tuning device shall be arranged to permit interchange without removing the line trap. The line trap shall be equipped with bird barrier.
The line trap shall conform to I.E.C. Publication No.353 and I.S. Publication No. 8792.

Suitable terminal connectors as per layout requirement shall be provided for Line Traps. The terminal connectors shall conform to IS: 5561.

4.0 COUPLING DEVICES (LINE MATCHING UNIT AND PROTECTIVE DEVICES) :

"COUPLING DEVICES" for power line carrier circuit, are devices interposed between the coupling capacitors or coupling voltage transformers and the connection line (Co-axial Cable) to the PLC terminals and in conjunction with the coupling capacitor/coupling voltage transformer ensures :

a) *The efficient transmission of signals from the connection line to the high voltage line and vice versa.*

b) *The safety of personnel and protection of low voltage parts of the installation against the effects of power frequency voltage and over voltages. Phase to Phase coupling is to be adopted.*

The coupling devices shall be designed to perform the following functions. The coupling device may form a single assembly or be divided into several separate components.

COUPLING FILTERS :

Coupling filter in conjunction with the capacitance of the coupling capacitors/capacitor voltage transformers shall constitute a broad band pass type filter. It should match the characteristic impedance of the high tension line with impedance of the connection line for PLC transmitter/Receiver. The phase to earth characteristic impedance of the high tension line may be assumed to be 320 Ohms for 400 KV lines ,220 KV lines and 132 KV lines.

DRAINAGE OF CHARGING CURRENT:

The primary of the coupling unit shall have a low impedance for operating frequency of the power line (50 Hz) so that the charging current of the coupling capacitor is grounded.

INSULATION :

The matching transformer of the coupling device shall introduce a galvanic isolation between the input and output circuits of the device and should be able to withstand a test voltage of at least 3 KV rms. for 1 minute.

The coupling device shall also be provided with a protective device which shall protect the carrier equipment against excess voltage which may occur when the coupling capacitor becomes defective or the ground connection to the coupling unit is interrupted.

A lightning arrester shall be connected as directly as possible between the primary and earth terminals and shall be capable of protecting the coupling device and the carrier frequency connection.

The lightning arrester shall have power frequency spark over voltage coordinated with the equipment ahead of it.

The coupling device shall conform to the following carrier frequency operating characteristics and apply to phase earth coupling units:

a) Nominal line side impedance lines) (Phase to Earth)	:	320 Ohms (for 400 KV, 220KV & 132KV
b) Nominal equipment side	:	150 ohms for balanced impedance secondary circuit or 75 ohms for unbalanced secondary circuit .
c) Max. Composite loss.	:	Not more than 2 dB.
d) Transmission band.	:	78 to 500 KHz for broad band tuned type.
e) Return loss.	:	The line side and equipment side return losses shall not be less than 12 dB over the whole of the available bandwidth of the coupling device.
f) Nominal peak envelope power (for inter modulation product 80 db down)	:	Not less than 650 watts.

The bidders may note that composite loss is the power loss occurring in the carrier signal after passing through the coupling unit complete with CCs or CVTs. Coupling unit is supposed to be loaded with its primary and secondary impedance while capacitor is assumed to have no loss.

The bidders shall specify the capacitance of the coupling capacitors/CVTs with which the coupling unit may be used for the above transmission band.

Two nos. phase to earth coupling units should be capable of being used to form inter phase or interline coupling. In case any separate matching transformer or matching unit is required the same shall be offered.

The bidder shall also offer suitable earthing switches for grounding the low voltage terminals of the CC/CVT for carrying out maintenance, dismantling of coupling device assembly or any other works on coupling unit. The earth switch shall have to be mounted on the structure separately. Separate Drainage Coil should be incorporated in the coupling device.

The coupling device should be suitable for outdoor mounting and shall be fitted on the steel structure which shall also be used for mounting CCs/CVTs. Temperature of metallic equipment mounted outdoor is expected to rise up to 65.6ºC during maximum ambient temperature of 50ºC specified. The equipment offered shall satisfactorily operate under these conditions.

The coupling device shall conform to the IEC publication No.481 and I.S.No.8997.

The connection between coupling device and CC/CVT shall be done by means of 6 sq.mm. copper conductor taped with 11 KV insulation.

5.0 HIGH FREQUENCY CABLE :

High frequency cable shall be offered to connect coupling unit installed in the switchyard to the PLC terminals installed indoors. The high frequency cable to be offered by the bidders shall be suitable for being laid directly to the ground or in trenches or in ducts. The cable shall be lead sheathed and steel armoured. The capacitance of the cable shall be low so as to minimize attenuation at the carrier frequency range. The impedance of the cable shall be so as to match with the output impedance of PLC terminals and secondary impedance of the coupling units. The cable shall be insulated to withstand a test voltage of 4 KV rms. for one minute between conductor & outer sheath. The bidder shall offer Co-axial H.F. cable with 75 Ohms impedance (unbalanced.)

The bidders shall furnish the values of attenuation per KM for the high frequency cables offered at various values of carrier frequencies in the range of 40 KHZ to 500 KHZ.

The maximum attenuation at various frequencies shall be as follows:

Frequency in KHz	Attenuation in dB /Km
10	1.2
60	1.8
300	3.9
500	5.5

High frequency cable shall be required to be supplied on drums containing lengths of 500 or 1000 metres of continious length.

The H.F.cable shall conform to the I.S. Publication No.11967.

6.0 POWER LINE CARRIER TERMINALS:

Single side band PLC terminals of latest I.C. version equipped for fixed frequency duplex system working shall be offered for speech and superimposed channels (multipurpose) and for protection purpose. The PLC terminals shall be complete with H.F. Hybrid & filters and shall have necessary frequency stability so that adjacent channel working is possible.

The PLC terminal shall be mounted in a floor mounting, vermin proof, sheet metal cubicle. The construction shall be modular in nature and the terminal shall be provided with sufficient test points on various printed circuit boards and built in indicating instruments to check up important voltages and dB levels in various parts of the PLC terminals. The fuses shall be so mounted as to allow their easy identification, inspection and replacement. Suitable supervision and alarm facilities and potential free contacts for repeat purposes shall be provided to enable these to be used for annunciation on the main control panels. All individual parts of the carrier terminals shall be accessible from the front so that erection of various cabinets side by side and back to back will be possible. All component parts of the PLC terminals shall be suitably tropicalised and protected against harmful effects of humidity, fungus etc. The cabinet shall be suitable for bottom cable entry. Screw clamp type terminals shall be provided for interconnection wiring. The terminal should be provided with proper ventilating arrangement and locking arrangement for prevention of wrong insertion of printing card.

The input and output parameters shall be in accordance with the recommended values of IEC : 495 for an ambient temperature range of 0-50^0 C. The equipment shall be capable to withstand 55^0 C for six hours continuously.
PLC terminals shall conform to the following electrical characteristics :

a)	Mode of transmission	: Single side band amplitude modulation.
b)	H.F. range	: 40 to 500 KHz.
c)	Nominal carrier frequency band	: 1 x 4 KHz for single channel sets. 2 x 4 KHz for twin channel sets.
d)	Effectively transmitted speech frequency band or signal frequency band when only speech or signal is transmitted	: 300 Hz to 3400 HZ or more.
e) i)	Effectively transmitted, speech plus signal frequency band in case of multipurpose use	: Speech : 300 to 2000 Hz : Signal : 2160 to 3400 Hz or more.
ii)	The Transit Band Pass filter should be of wide band (2000-3400 Hz)	
f)	Nominal Impedance	:
i)	Carrier Frequency Side	: 75 ohms unbalanced or 150 ohms balanced.
ii)	VF side	: 600 ohms.
iii)	Return loss within the carrier frequency band.	: shall not be less than 14 dB Suitable strapping should be provided for 75 ohms and 150 ohms.
g)	Nominal carrier frequency power (peak envelope power available at line output terminal of the equipment at a resistive load equal to the nominal load impedance for voice and data transmission).	: Adequate to maintain S/N ratio under adverse conditions.
h)	Supply voltage	: 48 V.D.C.(+ 15% - 10%) with +ve pole earthed. The PLC terminal shall provide protection against short circuit of the output terminals of power supply units to ensure that the unit is switched off from supply without causing any damage to the power supply unit itself.
i)	Frequency difference between voice frequency band transmitter and receiver in a pair of PLC terminals.	: as per relevant IEC specifications
j)	Stability of carrier frequency	: +/- 5 Hz

from its nominal value.

k) Effectively transmitted speech and data signal frequency band Should be within. : 0.3 to 3.76 KHz.

l) Relative levels (VF side) : Across 600 ohms
a) 4 Wire transmit : 0 to 17 dBr.
b) 4 Wire receive : - 3.5 dBr. to + 8 dBr.
c) 2 Wire transmit : 0 dBr.
d) 2 Wire receive : - 7 dBr.

m) Level regulations control (Automatic Gain Control) : In case of a 30 dB change in the carrier frequency signal level within the regulation range, the change in voice frequency receiver levels of both speech & signals shall be less than 1 dB.

n) Telephone signaling channel :
i) By frequency shift keying suitable for both 2-wire and 4-wire mode of communication.
ii) The signaling channel shall be operated by a potential free open or closed contact of the relays at the transmit side and provide a potential free change over contact at the receiver side of the relays. All relays to be provided in the speech circuits shall be hermetically sealed.

o) Permissible limits for variation of overall loss (attenuation) of the speech channel relative to 800 HZ for back to back operation of one pair of terminals without compander.

300 - 400 Hz : - 0.9 to + 3.0 dB
400 - 600 Hz : - 0.9 to + 1.8 dB
600 - 1600 Hz : - 0.9 to + 0.9 dB
1600 - 2000 Hz : - 0.9 to + 1.8 dB
2000 - 2400 Hz: - 0.9 to + 1.8 dB

} or +/-1.5 dB for the complete band of 300 to 2400Hz (without compander)

p) R.F. sensitivity : - 43 dBm

q) Noise performance :
i) Noise generated within the terminals. The weighted telephone noise level measured at the speech output of a pair of PLC terminals without companders shall not exceed -60 dBm. OP, measurement shall be carried out as per I.E.C. specification No.495 of 1974.

ii) Signal to noise ration (as per report committee no.14 Tele transmission of CIGRE of 1962) for voice communication referred to 1 mW at a relative level of zero : 35 dB.

The bidder shall offer voice frequency companders to be used in conjunction with the PLC terminals for speech as moduler items. The terminal shall also be provided with Jack Telephones and 4-wire Extension Desk Telephones with signaling facilities for point to point communication.

The PLC terminals shall be provided with emergency call facilities from the carrier sets for point to point carrier communication and complete with telephone suitable for hanging inside the cabinet.

The PLC terminals should be of vermin proof and provided with a ventilating fan. Necessary socketing arrangement for connection of the H.F. cable from the coupling device shall have to be provided.

Additional accessories (Dummy Load , Laptop with necessary software etc.) wherever necessary are to be provided with the PLCC carrier such that the Transmitter of the PLCC can be looped back to its own Receiver in order to carry out local testing of the PLCC terminal.

Print Extender should be provided along with each PLCC carrier to have the testing facility of PLCC prints at site.

The following tests shall be carried out :

i) " Voltage withstand tests indicated in relevant IEC/IS – Specification. The bidder shall however have to clearly indicate the voltage withstand value of the equipment."

ii) The carrier link shall be set up by connecting two terminals with an intermediate circuit simulating actual worst conditions of maximum loss, white loss, noise spikes. The system shall perform satisfactorily for all combinations of inputs. This test shall be carried out for a period of 3 days.

iii) Before and after the above test measurements of input and output values will be made and the results shall satisfy the requirements indicated in IEC-495.

iv) All modules and sub assemblies shall be energized and tested individually as well as in assembled form at the factory.

The bidder shall submit the guaranteed technical particulars of PLC terminals in accordance with guaranteed technical particulars furnished separately.

7.0 VOICE FREQUENCY TRANSMISSION EQUIPMENT FOR TELE PROTECTION :

Voice Frequency Telemetering Equipment/MODEM is required for telemetering purpose for direct interfacing of Remote Terminal Unit"s (RTU) data i.e. digital data to PLCC Panel.

The F.M. voice frequency transmission equipment for protection signaling is required for transferring the trip commands from one end of the line to the other for remote tripping of breaker as indicated in Para 1.5.3,1.5.7, 1.5.8,1.5.9. These channels shall be provided on the multipurpose PLC terminals for protection of each 400 KV & 220KV circuit. One single channel tele- protection equipment should be capable to provide 400 &220KV KV double circuit protection.

The equipment shall be of modular construction and of plug in type using solid state components/integrated circuits and shall be mounted in vermin proof steel cabinets. The equipment shall be provided with sufficient test points on the printed circuit Board and

built in indicating instruments to check up important voltages and currents in various circuits. The fuse shall be so mounted as to allow their easy identification, inspection and replacement. Suitable supervision and alarm facilities and potential free contacts for repeat alarm purpose shall be provided.

All individual parts of the equipment shall be accessible from front so that the equipment can be mounted back to back against wall. The equipment shall be suitably tropicalised and protected against the harmful effects of humidity, fungus etc. The cabinet shall be suitable for top or bottom entry. Screw clamp terminals shall be provided for interconnection with relaying equipment.

It shall be possible to test the reliability of the protection channels end to end with the equipment remaining fully operational to ensure that the genuine trip command will be transmitted during testing. Counters to register the number of trip commands transmitted/received shall be provided at both ends.

The voice frequency transmission equipment shall be insensitive to corona noise and shall remain unaffected by impulse type noises generated by the operation of switchgear equipment or by short circuit arcs. The bidder shall clearly explain the measures adopted to make the equipment insensitive to corona noise and impulse type of noise of amplitude greater than the level of the trip signal. The equipment shall have reliability and high security within the stipulated transmission time.

The speed of trip circuit transfer channel shall be such that the time interval measured from the point of energisation of transmitter(through transmission of the signal over carrier link) and closing of the output contact at the receiver end shall not exceed 25 ms. It is presumed that the output contact provided in the receiver is capable of making and breaking the trip coil circuit of 400 KV & 220KV breaker whose rating is 220 V DC 200 W per trip coil per phase. In case however, an additional auxiliary relay is needed to be included for providing the contact of desired rating, the above mentioned trip transfer time of 25 ms shall be inclusive of the operating time of the auxiliary relay.

Protection signaling equipment shall be suitable for direct and permissive tripping of remote end breaker. It shall provide transmission and reception facility for minimum of two protection signal. The protection equipment offered by the bidder shall include minimum two sets of protection couplers; one as a back up of other connected with two nos. carrier channels so that in case of failure of either of the carrier channel or protection coupler the system is taken care off by the second one.

The protection equipment offered by the bidder shall include 2 Nos. of change over contacts as spares for use by the protection relaying scheme. In addition to those, 4 nos. of spare change over contacts shall be provided for each of the supervision contacts provided in this protection equipment.

The protection equipment shall work of supply voltage of 48V (+ pole earthed) with +15% to - 10% voltage variation and necessary power supply modules if the equipment is working of other voltage shall be supplied duly wired.

It has to be ensured that under no circumstances protection channel should share the power. Each protection channel shall be able to transmit power for which the system is designed. Speech and superimposed data signals, in the same protection terminal should get disconnected momentarily during the operation of protection channels.

The type tests and routine tests as indicated in the relevant IEC or applicable standard shall be done in presence of the purchaser or his authorized representative. The equipment will be despatched only after the test reports are approved.

For all telemetering purpose including data communication screened armoured type copper cable of suitable dimension and specification as per relevant IS/IEC shall have to be used.

8.0 ELETRONIC PRIVATE AUTOMATIC EXCHANGE (Microprocessor Based):

The EPAX will serve as a network node or terminating exchange for carrier telephone, for trunk dialing system on PLCC. It should handle both local and long distance traffic. Electronic PAX of latest design should be offered with suitable programmable features. The electronic PAX offered should be capable of operating along with the existing carrier terminals and existing EPAX. Also it should, if necessary eliminate the use of existing EPAX at the station where it is installed. All functions of the existing EPAX should be handled by the offered electronic type PAX. Fully automatic operation among the local subscriber of the exchange and any outgoing direction over the carrier channel should be possible.

The EPAX should be suitable for connection with new PLCC panel or existing PLCC panel and Fibre Optic panel simultaneously at any station wherever required whatever be the make of PLCC panels and Fibre Optic Panels.

The exchange should be of modular construction, housed in sheet steel cabinet, floor mounting type and available for operation on 48V DC (+15% - 10%). The EPAX should employ TDM-PCM technology with a fully non-blocking switching system. It should support 16 local extensions and 24 E&M Trunk Lines. The EPAX should be provided with conventional modern facilities like dial, busy, ringing, ring back and also additional tones such as carrier tones, interrupted tones etc. In addition, the EPAX must be equipped with priority within the exchange and priority over Trunk Lines and to Transit calls at the distant end. The EPAX should have Barred Access to Trunk Lines and to Transit calls. The EPAX should be able to find 5 alternative switching routes other than the main route. The EPAX must have both 2-digit and 3-digit station- numbering facility. It should have programmable selection facility for number of out pulse digit. The EPAX should be equipped with modern self-checking diagnostic and monitoring facilities. Adequate protective devices should be incorporated wherever necessary. Provision for minimum 8 E&M Trunk Lines and 16 local extensions shall have to be kept in the EPAX for future use.

The Push Button Telephone should be as per DOT norms and should match with the EPAX.

The bidder shall be responsible to provide workable interconnection of the EPAX with all PLCC panels. Telephone signal from EPAX shall have to be taken to control desk and other locations as required in good quality.

Only screened armoured type telephone cable should be supplied for all type of two wire & four wire connections.

9.0 LEAD ACID STORAGE BATTERY:

TECHNICAL SPECIFICATION :

i) POWER SUPPLY :

The equipment shall conform to the requirement of the latest edition of relevant I.E.C/I.S. specification as mentioned below :

IS - 226 of Sulphuric Acid
IS - 1652 of Lead Acid Battery with plante positive plates.
IS - 2206 of HRC cartridge fuses.
IS - 1069 of Water for storage battery
(General)

D.C. Power supply shall comprise of Battery and Battery charger in parallel operation. In this mode, the charger shall be required not only to continuously feed a variable load but also deliver trickle / quick charge current for the battery.

Normally the battery shall float across the charger in a fully charged condition at a voltage corresponding to 2.15 V/Cell to 2.25 V/Cell depending on trickle current requirements of the battery. When floated as above, internal losses of the Battery shall be fully compensated and it shall not be necessary to raise its voltage beyond 2.4 V/Cell at any time during its service time. For first charge, however, when load shall not be connected across the charger, the battery shall require a voltage of up to 2.75 V/Cell for forming the plates.

Battery charger shall be designed to have a current limiting feature such that its output voltage falls rapidly with increase in output current beyond the rated capacity.

Note : Rated load current requirement of all equipment is normally fed from the battery charger.

ii) LEAD ACID STATIONARY BATTERY :

Bidder shall quote for 24 cell lead acid Plante Type Battery. Battery shall have adequate capacity to feed the rated load for a period of approximately ten hours after the mains fails. For the above purpose, it may be assumed that battery is in the fully charged condition when mains failure occurs. Furthermore for estimating required ampere hours capacity of the battery the following derated factors and margin shall be taken into account.

a) Derating factor on account of ageing of the battery : 90% i.e., a factor of 1.11
b) Derating factor on account of decrease in ambient temperature 1.0% per degree centrigade.
c) 10% margin in capacity.

Note : It may be assumed that in winter months room temperature shall not fall below 0°C. Tenderer shall give detailed calculation in his bid.

Refer Schedule enclosed for Battery accessories.

Battery shall be completed with acid stand, inter-row and inter-tier connectors. The battery may either be assembled and given the first charge at site or it may comprise performed enclosed type cells designed for stationary telephone exchange.

BATTERY RACK/STAND:

The wooden rack shall be made of good quality wood. They shall be free standing type mounted on porcelain band rubber insulators. The arrangement shall be subject to the approval of the Employer/owner. Battery racks and wooden supports for cable termination shall be coated with three (3) coats of anti-acid paint of approved shade. Numbering tags for each cell shall be attached on to the battery racks.

Batteries shall conform to all type tests as per latest IS.

All acceptance tests as required by relevant Indian standard shall be carried out at site after completion of installation. The capacity tests shall be carried out for 10 hour discharge rating.

BATTERY ACCESSPROES:

Each battery is to be provided with the following set of accessories:

1.	Syringe type Hydrometer	2 Nos
2.	Thermometer	2 Nos
3.	Specific gravity correction chart	1 No
4.	Digital Multimeter	1 No
5.	Rubber Apron	2 Nos
6.	Rubber Gloves	2 Pairs
7.	Wall mounting poly holder for Hydrometer	1 Set
8.	Spanner	2 sets
9.	Cell lifting straps	2 Nos
10.	Glass/Plastic Funnel	2 Nos
11.	Rubber Syphon	2 Nos
12.	Acid resisting jug	2 Nos
13.	Rubber boots (knee high)	2 Pairs
14.	Rubber syringe	2 Nos
15.	Any other accessories/device required for the battery	
16.	Maintenance instructions.	

11. BATTERY CHARGER (48V) :

11.1 SCOPE :

11.1.1 This specification covers the design, manufacture, assembly, testing at manufacturer's works, supply, delivery, erection and commissioning at site of battery charger in 400/220/132/33KV, 220/132/33KV & 132/33KV sub-station with provisions of both float and boost charging of battery. The battery will be procured separately as per specification of battery.

11.1.2 The minimum ampere-hour ratings of battery for 400/220/132/33KV S/stn.shall be 300 AH. The voltage rating of 300AH battery shall be 48 +/- 10% volt. For 220/132/33KV S/stn&132/33KVS/stnthe minimum ampere-hour rating of battery Shall be 200AH.The voltage rating of 200AH battery shall be 48± 10% volt. D.C. system shall consists of two no. Battery Charger of 48V, 300AH for 400/220/132/33KV S/stn.and one no. Battery Charger of 48V, 200AH for 220/132/33KV S/stn&132/33KVS/stn For 400KV S/stn there shall be two sets of battery having ampere-hour rating of 300AH and for all other voltage class one no. Battery set having rating of 200AH.

11.2 STANDARDS :

11.2.1 The equipment covered by this specification shall unless otherwise stated, be designed, constructed and tested in accordance with the applicable sections of the latest Indian Standard specification and Indian Electricity Rules.

IS :2026	Power Transformer
IS :2959	AC Contactors for voltages not exceeding 1000 Volts.
IS :1248	Indicating instruments
IS : 2208	HRC Fuses
IS :13947(P-3)	Airbreak switches, disconnectors& fuse combination units for voltage not exceeding 1000 V AC or 1200 V DC.
IS :2147	Degree of protection provided by enclosures for low voltage swichgear& control gear
IS :3231	Electrical relays for Power System
Protection IS :3842	Electrical relays for A C System Protection
IS :5	Colours for ready mix paint

11.3 DEVIATIONS :

11.3.1 Normally the offer should be as per Technical Specification without any deviation. But any deviation felt necessary to improve performance, efficiency and utility of equipment must be mentioned in the Deviation Schedule with reasons duly supported by documentary evidence and advantages of such deviations. Deviations suggested may or may not be accepted. But deviations not mentioned in Deviation Schedule will not be considered.

11.4 MINIMUM RATING OF THE BATTERIES :

It shall be possible to set the charger to the following voltages across its battery terminals by means of a switch on the front of panel.

i) Trickle Charge : A preset voltage corresponding to 2.15 V/Cell
to 2.25 V/Cell as required.

ii) Quick Charge (during failure of main Float Charger) : A preset voltage corresponding to
2.4 V/Cell.

iii) Boost Charger : Continuously variable between 2.45 V/Cell
and 2.75 V/Cell as required.

iv) Provision of dropper diode should be kept in order to limit the load voltage within specification during quick mode of operation.

11.5 LOAD IMPOSED ON CHARGERS :

The following load will be imposed on the chargers :

Under normal operating conditions the charger should give a D.C. outputto PLCC Terminals, Protection Coupler Units, Fiber Optic Terminals, EPAXes etc. as and when required as well as float charging current of the battery.

11.6 RATING OF THE CHARGERS :

The float charger and the float-cum-Boost Charger shall have adjustable output current 60 Amps D.C. for 300 AH for float charging and 60 Amps DC for boost charging. Charger shall have 20% spare capability. The float charger and float cum-boost charger shall have adjustable current 50Amps DC for 200AH for float charging and 50Amps DC for boost charging. Charger shall have 20% spare capacity.

11.7 GENERAL DESCRIPTION FOR CHARGERS OF 48 V, 300 AH BATTERY AND 48V ,200AH BATTERY :

11.7.1 The charger shall be enclosed in a sheet steel enclosure made of 14 gauge cold rolled sheet steel, dust and vermin proof, floor mounted type with ventilating louvers with fine wire copper mesh on two sides and with rear access doors. The charger shall be suitable for indoor installation in a clean but hot and humid tropical atmosphere. Removable gland plates for all cables and lugs for power cables shall be within the scope of bidder. The lugs for power cable shall be made of electrolytic copper with tin coat. The charger shall have hinged double leaf doors provided on front and on backside for adequate access to the inside of the charger. All charger cubicle doors shall be properly earthed.

11.7.2 All the elements used in the battery charging scheme shall be suitably rated for the duty involved. The fuses shall be of HRC link type and of proper rating of the circuit to be protected. All the instruments, switches and control equipment shall be from reputed manufacturer and be of best quality and shall conform to the relevant I.S. Specification. The switch shall be complete with position indicators. The switches and

indicating lamps shall be flush/semiflush type mounted on the front panel and shall be provided with name plate of approved type. The meter shall be of 96 mm X 96 mm square dial and shall be flush mounted on the front panel. All the semi conductor devices shall be from reputed manufacturer and shall be protected with power transient suppressor circuit. In addition necessary fuses shall be provided for short circuit protection. The rectifier transformer shall be continuously rated, dry air cooled (AN) of class B insulation type. The rating of the transformer shall have 10% overload capacity. The transformer shall be of suitable rating to comply with maximum output with minimum input voltage. The maximum temperature attained by any part of the equipment of the battery charger at specified rating should not exceed the permissible limits as stipulated in relevant I.S.S. The designing of the equipment shall be made taking 50°C as ambient temperature of the site.

11.7.3 The wiring shall be complete in all respect with PVC insulated stranded copper wire and the size of the wire shall not be less than 2.5 sq.mm. Each wire shall be continuous from end to end and shall not have any joint within itself. The insulation grade of the wiring shall be 1100 V grade. The colour of 3 Phase, 4 Wire AC.supply shall be red, yellow, blue and black for phases and neutral. The D.C.wiring shall be of the colour other than the above (preferably grey) with the +ve and -ve marking in the ferrule. Terminal ends of all the wires shall be provided with numbered ferrules, suitably coloured as mentioned for wires above. All spare contacts of relays and switches shall be wired upto the terminal block. At least 20 % spare terminals shall be provided for control. The insulation of all circuits except the low voltage electronic circuits shall withstand test voltage of 2 KV AC for one minute. An air clearance of at least 10 mm shall be maintained throughout right up to terminal lugs. Whenever this clearance is not available, the live parts shall be insulated or shrouded.

11.7.4 The input terminals of the battery charger shall be marked "R,Y,B,N" for AC. supply. The terminals where battery will be connected shall be marked as -ve (24), -ve (tap cell) and +ve common. There shall be five load terminals each of which shall be of 6A rating, one load terminal of 10A rating and one load terminal equal to the full load capacity of the charger. **Charger shall be wired such that positive poles of both charger and the battery shall be earthed.**

Charger output shall be substantially free from switching surges, transients and hunting etc. Output circuit of the charger shall have proof against short circuit on the load side.

11.7.5 The interior and the exterior of the battery charger cabinet shall be properly painted conforming to the latest issue of relevant ISS. The finishing coat on the exterior of the panels shall be deep grey, polished cellulose enamel or equivalent, sprayed to present delightful appearance while on interior faces, the finishing coat shall be of light grey shaded paint (Shade - 631 of IS:5), sprayed to give a contrasting effect with the cubicle wiring and shall be according to ISS. The degree of protection of charger enclosure shall be at least IP-42 as per IS:2147.

11.7.6 Calculation for the ratings of the transformer and other particulars of the elements considered in the battery charging scheme are to be furnished by the successful bidder during detailed engineering indicating the basic design data.

11.7.7 Copper Earth bus of suitable cross section shall have to be used in the charger for earthing purpose.

11.8 SYSTEM DESCRIPTION FOR CHARGERS OF 48V, 300 AH, &48V ,200AH BATTERY :

11.8.1 The charger shall be suitable for charging the battery and supplying the load simultaneously. The entire charger scheme shall be divided in two sections, "float charger section" and "float-cum-boost charger section". The float-cum-booster charger shall be suitably operated either in float mode or in boost-cum-standby float charger mode.

11.8.2 Under normal operating condition, with the input AC supply present, the float charger section' shall supply the DC load and also float the battery by trickle charging and the "float cum boost charger section" shall be kept off.

11.8.3 In the event of main AC supply failure, the battery shall supply DC power to the Sub-station DC Load. The battery thus discharged shall be charged after resumption of AC. supply by the boost charger. Now, the `float-cum-boost charger section' shall be kept in boost mode through float/ Boost selector switch at the specified current needed for the battery. During this operation, `the float charger section' shall supply the load current only while boost charger section of float cum boost charger shall boost charge the battery and the load supply shall be disconnected from the battery through a contact of a contactor. If the `float charger" fails during this period, the Float cum Boost charger will change its mode of operation to quick charge mode and charge the battery bank at constant voltage (i.e. At a preset voltage corresponding to 2.4 V/cell) with current limit (finishing rate at battery terminal) method and simultaneously take care of connected DC load thru dropper diodes, without any interruption. Load terminal voltage is kept within 48V+/-10% limits. Manual quick charge selection facility shall be provided in the charger. So that Float cum Boost charger shall suitably rated to take care of load as well as charging current of the Battery. In boost mode the charger shall be capable of quick charging the battery upto 2.75 Volts per cell and also capable of restoring fully discharged battery to a state of full charge in eight hours with 25% spare margin over maximum charging rate.

11.8.4 If there is any trouble in " float charger section ",i.e. When converter kept at off/standby mode, If Main Float fails, this section will immediately switched on at float mode and take over the function of Main Float without any interruption. Normally Battery shall be kept parallel with load bus thru D.C. contactor.Suitable arrangement shall be provided at the charger output circuit for isolation of battery during maintenance.

11.8.5 For accommodation of these two sections, separate compartments shall be used so that maintenance or rectification work can be carried out in one section while the other remains in service.

11.8.6 The "float charger section" & the “float cum boost charger section" are detailed below :

Float charger section : The AC input supply, 400 volts ± 10%, 3 phase, 4 wire, 50 Hz, shall be provided through suitably rated switches and fuses/MCCB & contactor having thermal over load and short circuit protection. This section is capable of supplying the DC load while floating the battery. The thermal overload contacts shall be used for isolation of charger circuitry from input AC. supply as well as to give audio and visual alarm. The incoming supply shall be fed to a three phase, double wound step down transformer, secondary of which shall be connected to a three phase, full wave thyristor bridge rectifier unit with suitable surge suppressor circuit. An automatic voltage controller unit shall control the output voltage of the float charger by adjusting the firing angle of the thyristors. Provision shall also be kept for manual operation by adjustment of potentiometer through an auto/manual selector switch. Automatic voltage regulation shall be provided to maintain the float charger DC output voltage within ±1% from no load to full load and or AC line voltage variation of ±10%. Suitable choke and filter circuit shall be provided to get stabilised and to limit ripple content within 5mV psophometricat full load with battery disconnected. The DC output voltage shall be connected to the load bus through blocking diode at the positive pole of the output circuit to prevent reverse current flow from battery into the charger and a set of fuses.

11.8.7 Four numbers indicating lamps shall be provided, three for AC. supply ON indication and one for float charger ON indication. One ammeter with necessary shunt, for measuring float charger output current, shall be provided.

11.8.8 All fuses shall be of HRC link type. Necessary number of fuses of proper ratings shall be provided at the output of the transformer and rectifier. Fuse failure alarm both audio and visual shall be provided for battery fuse, rectifier fuse and charger output fuse. One charger failure relay after charger output fuse shall be provided to give audible as well as visual alarm, in case of failure of float charger.

11.8.9 Float cum boost charger section : The AC input supply, 400 Volts +/-10%, 3 phase 4 wire, 50 Hz shall be provided through switches and fuses/MCCB & contactor of suitable rating with thermal over load and short circuit protection . This section is capable of either supplying the DC load while charging the battery in float mode or in boost mode for quick charge the battery after heavy drainage through a suitable Float/boost selector switch. An automatic voltage controller for float charging and automatic current controller for boost charging shall control the output voltage and current of the float and boost charge respectively by adjusting the firing angle of the thyristor. The thermal overload relay contacts shall be used for isolation of charger circuitry from input supply as well as to give audible and visual alarm. The incoming supply shall be fed to a three phase, double wound step down transformer. The voltage variation and the battery charging current variation can also be carried out by manual adjustment of potentiometer through Auto/manual selector switch, for both the float and boost charge mode of operation in addition to normal load supply. The secondary of the transformer shall be connected to a three phase full wave thyristor-bridge rectifier unit with suitable surge suppressor circuit. Suitable choke and filter circuit shall be provided to getstabilised and to bring down the ripple at the output within the specified limit (5mV psophometric at float mode with battery disconnected).The DC output voltage shall be connected to the load bus through a blocking diode at the positive pole of the output circuit to prevent reverse current flow from battery into the charger & a set of fuses. When operated in float mode the charger

should have automatic voltage regulation to maintain the float charger DC output voltage within ±1% from no load to full load and or AC line voltage variation of ±10%.

When battery voltage drops below a set value, the charger is switch ON in the boost mode and charging starts automatically at a starting rate and will be maintained constant current up to 2.35v/cell which is automatically monitored by the electronic current controller unit. Once the battery voltage reaches up to 2.35v/cell, the charging current will be reduced to the finishing rate automatically by the current controller circuit. The finishing rate will be maintained up to 2.75v/cell and there after the converter will be transferred to standby mode automatically. However, if power supply fails, while boost charging operation is in progress, the battery shall be connected to the load bus through the DC contactor immediately to avoid any interruption. A Tap Cell diode should be incorporated between an intermediate cell and the load bus to provide an uninterrupted DC supply to the load bus.

11.8.10 Four nos.indicating lamps shall be provided, three for AC. supply `ON' indication and one for "float cum boost charger" `ON' indication. Three nos. ammeter with shunt shall be provided for measuring boost, on demand float charger output currentand battery current (centre zero) . Adequate no.of fuses of proper ratings shall be provided at the output of the rectifier unit. Fuse failure alarm both audio and visual shall be provided for rectifier fuse, Filter capaciter, charger output fuse over current fuse, battery isolation fuse etc.

11.8.11 One charger failure relay after charger output fuse shall be provided to give audible as well as visual alarm, in case of failure of charger.

11.8.12 For all charger scheme, one voltmeter with fuse and voltmeter selector switch (RY-YB-BR-OFF) shall be provided for measuring the AC. input supply. Another voltmeter with fuse and suitable voltmeter selector switch with provision of OFF position shall be provided to measure the float charger output voltage (load), float cum boost charger output voltage (load), battery voltage at 24 and „TapCell" and the load voltage. The battery shall be connected to the DC output of the charger through a continuous duty triple pole 100 amp switch, lockable in both ON and OFF position with battery isolation fuses. For the entire charger scheme, the annunciation scheme having audio and visual alarm with common bell and accept reset and test push buttons and separate windows shall be provided for the following types of fault occurrence :

i) AC Input fail
ii) Wrong phase sequence
iii) Over and under voltage at DC output for variation of DC voltage more than +/- 10% of the rated value
iv) Under voltage of AC input,
v) Individual charger failure,
vi) Individual charger thermal overload,
vii) Earth fault of the DC bus and
viii) Battery Earth Fault (+ ve) and (- ve).
ix) Rectifier fuse fail
x) Filter capaciter fuse fail
xi) Charger output fuse fail

xii) Charger over current
xiii) Battery isolation fuse fail

The charger shall be provided with an over voltage mains release, alarm (remote) and indication (local) whenever voltage across load terminals exceeds 55 volts.

The charger shall give an indication locally and make a potential free contact available for operating a bell at a remote point whenever main fails or charger develops a fault and load is supplied by the battery.

Note : In the above condition the load shall be fed by the battery even after the main has been disconnected.

11.8.13 Suitable audio and visual alarm shall be provided for failure of load fuse. One space heater with thermostat and ON-OFF switch and fuse, one cubicle illumination fluorescent tube (230 V, single phase AC), operated from door switch and one D.C. emergency lamp with switch shall be provided for the charger panel.

11.8.14 Other instruments and devices, required to complete the total scheme shall also be supplied.

11.8.15 The detailed circuit diagram of the entire scheme as well as separate circuit diagrams of each of the various modules used for the system shall be furnished by the successful bidder.

The terminal numbers and ferrule numbers must be clearly furnished in the drawing.

11.9 PACKING :

All equipments shall have to be despatched suitably and securely, packed in wooden crates, suitable for handling during transit by rail and/or road.

11.10 GUARANTEE :

Electrical characteristics shall be guaranteed by the bidder. In case of failure of materials to meet the guarantee, MePTCL shall have right to reject the material. Guaranteed Technical Particulars are to be submitted by successful bidder during detailed engineering alongwith submitted drawings/documents. However format for submission of GTP shall be handed over to intending bidders at the time of sale of tender documents.

11.11 CONTACT DRAWINGS, CATALOGUE AND MANUALS :

In the event of placement of Letter of Award, general arrangement drawing and schematic drawing, manuals and catalogue of different equipment of charger are to be submitted in six (6) copies to the Chief Engineer, Engineering, MePTCL, Shillong, as per schedule of submission of drawings for our approval. After the drawings are approved, ten(10) copies of contract drawings, approved G.T.P., and catalogue of each type of charger shall be submitted. The contract drawings shall cover the following:

i) General arrangement drawing for the chargers and dimensional details and erection arrangement of the charger.
ii) Schematic diagram for the charger and detailed circuit diagram of the modules used for the system.
iii) Wiring diagrams of the charger. The master copy/original plates of all the final contract drawings shall have to be supplied thereafter.
iv) Other drawings, operation and maintenance manuals for each charger describing therein service and maintenance instructions for the chargers, list of equipment and their particulars provided in the charger, their function and detailed write-up of the method of operation shall also be submitted.

11.12 TESTS AT MANUFACTURER'S WORKS AND TEST CERTIFICATES :

11.12.1 Battery Chargers shall conform to all types tests as per relevant Indian Standard. Performance tests on the chargers shall be carried out as per specification. Rectifier transformer shall conform to all type tests specified in IS : 4540 and short circuit test as per IS :2026.

11.12.2 The supplier may be required to demonstrate to MePTCL that the chargers conform to the specification particularly regarding continuous rating, ripple free output, voltage regulation and load limiting characteristics before despatch as well as after installation at site.

The following tests shall be carried out in the presence of MePTCL "s representative, and six (6) copies of test certificates for each set of charger shall be submitted to the Chief Engineer (Tr. Proj.), for approval.

i) Checking of wiring and continuity of circuits.
ii) High voltage test on the equipment with accessories – All equipments and wiring shall be tested for withstanding the power frequency voltage of 3 KV (rms) to earth for 1 minute.
iii) Insulation Resistance of each circuit before and after high voltage test.
iv) Performance test and temperature rise test.
v) Checking of Load Limiting Features.
vi) Line Regulation and Load Regulation Test.
vii) Checking of relay operation and annunciation
viii) Routine tests according to the relevant *national standards on the transformers, rectifiers, instruments and other devices.*

MePTCL reserve the right to reject any equipment/auxiliaries or finished product if the same is not found to comply with the requirements of relevant IS/tests and this specification. The entire cost of acceptance and routine tests that are to be carried out as per relevant IS shall be treated as included in quoted price of the battery chargers. Contractor shall give at least 21 (twenty one) days advance notice intimating the actual date of inspection and details of all tests that are to be carried out.

SPECIFIC TECHNICAL PARAMETERS

SNO	DESCRIPTION	*FOR 132/33KV S/stn.*	*FOR 220/132/33KV S/stn.*	*FOR 400/220/132/33KV S/stn.*

1.	D. C. Voltage (V)	**48 +/-10%**	**48 +/-10%**	**48 +/-10%**
2.	Minimum Ampere Hour (AH) rating of battery	200	200	300
3.	No. of cells (No.)	24	24	24
4.	Ratings of voltage/cell a) Trickle charge (V) b) Quick charge (V)	2.15 to 2.25 1.85 to 2.75	2.15 to 2.25 1.85 to 2.75	2.15 to 2.25 1.85 to 2.75
5	Steady demand load (A)	50	50	60
6	Charger current rating a) Float (A) b) Float cum boost (A)	50 50	50 50	60 60
7.	Sheet steel thickness (SWG)	14	14	14
8.	Dial size of flush mounted Metres (mm^2)	96	96	96
9.	Ambient Temperature	50°C	50°C	50°C
10.	a) Control Wiring Size (sqmm) b) Insulation Grade(V)	Cu 2.5 1100	Cu 2.5 1100	Cu 2.5 1100
11.	AC Input Supply	400 V ±10% 3ph, 50 Hz	400 V ±10% 3ph, 50 Hz	400 V ±10% 3ph, 50 Hz
12.	Float voltage of Plante Cell (V)	2.15	2.15	2.15
13.	Ampere-hour rating capacity of battery based on discharge rate at 27°C for (hour)	10	10	10

Battery charger shall be suitable for continuous parallel operation and have a constant current, constant voltage characteristic.

12 **DCDB :**

DC Distribution Bus :

Each Sub-Station shall have one DC Distribution Bus for PLCC. The DC Distribution Bus shall have the following provisions:

a) The DC output from each of the two charger shall be in the range of 48 volt to 55 volt which would be connected through a switch with suitable fuse / MCB to a separate Distribution bus. Each Distribution bus shall have a total of 24 nos. 48V DC outlets, out of which 20 nos. outlets shall be suitable for connecting PLC Terminal / EPAX. Each of the other four nos. 48V DC outlets shall be suitable for

connecting a DC load of 10 amperes. Switches and fuses for all the said 48V DC outlets shall be provided accordingly.

b) There should be another suitable switch for interconnecting the two Distribution buses so that in case of any one charger going out of service the other charger may feed both the distribution buses, in which the total no. of outlets shall be restricted to a maximum of 16 nos.

Connection between battery charger to battery, battery charger to DC Distribution Bus and DC Distribution Bus to different PLCC loads shall have to be done by copper cable of adequate capacity to avoid voltage drop in the associated line. DC bus shall also be of copper of suitable cross section.

The AC. Supply to the battery charger shall also be of copper cable of suitable rating as per relevant IS/IEC.

Separate Earhing for PLCC Equipments have to be done during execution of work at site.

TECHNICAL SPECIFICATIONS

FOR

110 V BATTERY CHARGER

SPECIAL INSTRUCTIONS TO BIDDER

Please read following instructions carefully before submitting your bid.

1. All the drawings, i.e. elevation, side view, plan, cross sectional view etc., in AutoCAD format and manuals in PDF format, for offered item shall be submitted. Also the hard copies as per specification shall be submitted.

2. The bidder shall submit Quality Assurance Plan for manufacturing process and Field Quality Plan with the technical bid.

3. The bidder shall have to submit all the required type test reports for the offered item. ***However in case of partial submission or reports older than specified limit, bidder must submit his confirmation for those type test report/s to be submitted in the event of an order, without affecting delivery schedule, before commencement of supply, free of cost. In absence of this confirmation, the evaluation shall be carried out accordingly as non-submission of type test reports***.

4. The bidder must fill up all the point of GTP for offered item/s. Instead of indicating "refer drawing, or as per IS/IEC", the exact value/s must be filled in.

5. All the points other than GTP, which are asked to confirm in technical specifications must be submitted separately with the bid.

6. The bidder is required to impart training in view of manufacture, assembly, erection, operation and maintenance for offered item, at his works, to the person/s identified by MePTCL, in the event of an order, free of cost. The cost of logistics will be bear by MePTCL.

7. Please note that the evaluation will be carried out on the strength of content of bid only. No further correspondence will be made.

8. The bidder shall bring out all the technical deviation/s only at the specified annexure.

9. The bidder should indicate manufacturing capacity by submitting latest updated certificate of a Chartered Engineer (CE).

TECHNICAL SPECIFICATION OF BATTERY CHARGER FOR 110V, LEAD ACID *or Ni-Cd* TYPE BATTERY SETS

1.0. SCOPE:

1.1 This specification covers design, manufacture, testing at works and supply of the complete (i) ***Single phase, Float - 10A & Boost - 20A*** (ii) ***Three phase, Float - 30A & Boost - 50A/55A/80A*** battery chargers ***with DCDB*** suitable for 110 Volts Lead Acid or Ni-Cad Battery set.

The scope shall also include SCADA compatibility if indicated in schedule-A of respective tender.

2.0. APPLICABLE STANDARDS:

2.1 The design, manufacturer, and performance of the charger shall comply with all currently applicable statutes, regulations and safety codes. NOTHING IN THESE specifications shall be construed to relieve the bidder of his responsibility.

2.2. Unless otherwise specified, the battery charger shall conform to the latest applicable Indian/IEC, standards, and in particulars, to the followings standards.

a)	IS: 3895	:	Specification for Rectifier equipment in general.
b)	IS: 2208	:	Specification for HRC fuses.
c)	IS: 1248	:	Indication instruments
d)	***IS: 13947-I***	***:***	***Low Voltage Switchgear And Controlgear***
e)	IS: 2147	:	Degree of protection for cubicles.
f)	IS: 375	:	Specification for wiring.
g)	IS: 4540	:	Mono-crystalline semiconductor rectifier assemblies and equipment.
h)	IS: 6619	:	Safety code for semiconductor rectifier equipment.
i)	IS: 2026	:	Transformers.

j) IS: 2959 : AC contractors for voltage not exceeding 1000 V.

k) IS: 6005 : Code of practice for phosphating of Iron and steel.

l) IS: 5921 : Printed Circuit board.

m) IEC: 249 : Printed Circuit Board.

2.3. The bidder shall clearly state the standards to which the charger & its part items offered by him – Confirmed.

3.0 CONSTRUCTION:

i) It will be indoor, free standing, floor mounting and naturally air cooled type designed for continuous operation in a ambient temperature of 50 °C. Good ventilation shall be made through side louvers.

ii) Each charging equipment offered shall be housed in a sheet steel cubical reinforced by M.S. angle frame ***of size 25 x 25 x 3 mm min.*** and shall be mechanically strong. The cubical shall be dust and vermin proof. The degree of protection IP - 42 shall be provided and stated in the offer. The rear & front door cover of cubical shall be hinged and shall have locking agreement. Thickness of sheet steel shall be 3.0 mm for load bearing members and 2.0 mm for other sides.

iii) All the accessories and parts/items shall be adequate rating to suit the above requirement.

iv) Dimensions of the charger shall be within the following range:

a) Width 1200 mm x Depth 450mm x Height 1400mm for 110V, ***10/20A*** single phase battery charger.

b) Width 1450mm x Depth 700mm x Height 1850mm for three phase 110V, ***30/50-55A*** three phase battery charger.

For other ratings of Battery Charger minimum dimensions shall be: ≥ Width - 1200 mm x Depth - 450 mm x Height 1400 - mm for single phase charger and ≥ Width - 1450 mm x Depth - 700 mm x Height 1850

- mm for three phase charger by maintaining sufficient working space as well as adequate clearances which shall be decided during detailed engineering.

v) All ***equipments / items / accessories*** mounted on door or mounted inside the cabinet shall be provided with individual ***riveted, life lasting*** labels with ***description*** engraved.

vi) Gland plate: Gland plate ***of 3 mm thick M. S. Sheet*** for incoming / outgoing cables shall be provided.

vii) Arrangement for two separate earthing shall be provided.

viii) Electrical indicating instruments shall be mounted flush-on panel with only flange projecting. The dial shall be white with black numbers and lettering.

ix) The electronic control circuitry should have built in facture of soft start, so that whenever the charger is switched on, the output voltage should increase gradually.

x) Battery Charger shall be provided with earth bus bar of tinned copper flat, having minimum cross section 19 x 3 Sq. mm flat securely fixed along with insulator base and provision on both the sides of earth bus for connecting to purchaser's earthing grid.

Finish:

Each cubicle will undergo a through process of derusting cleaning, application of red oxide primer paint followed by two coats of light gray synthetic enamel paint of shade 631 of IS: 5 inside and outside. Components mounting plates inside the charger shall be painted with egg shell white colour ***inside and outside. Components mounting plates inside the charger shall be painted with egg shell white colour. Paint thickness shall be 80 ± 20 microns.***

Wiring

All chargers will be complete with internal wiring, input and output terminals. The components shall be liberally rated. Standard colour code practice shall be followed, with the use of ferrules for numbering and identification of wires. 1.1 KV grade FR & C1 type Copper conductor of suitable size shall be used. All hard wares such as screws, nuts, studs, washer etc. shall be of brass and non ferrous parts in electrical circuitry control / power.

4.0. RATINGS:

4.1 The charger for 110V battery set consisting of 55 Nos., 2.0 Volts Lead Acid ***(Tubular / Plante')*** battery set shall have following output ratings.

In case of Ni-Cad battery set (If specified in schedule-A)having equivalent nos. of 1.2 V Ni-Cad cells, the charger output ratings shall be in accordance to the requirement of Ni-Cad battery set.

a) 110V, Single Phase Battery charger:

(i) Float charge & load current ratings:

10 Amps at 110 V to 126 V DC.

(ii) Boost charging current rating:

20 Amps at 100V to 152 V D.C.

b) 110V, Three Phase Battery Charger:

(i) Float charge & load current

rating: 30 Amps at 110 V to 126 V

DC.

(ii) Boost charging current rating:

50 Amps ***/ 55Amp / 80Amp*** at 100 V to 152 VDC.

5.0 DUTY:

5.1 The composite charger shall consist of two separate chargers viz. the float charger and the Boost charger. The charger shall be require to cater the following requirements.

5.2 ***The float section of the charger shall be compatible to operate in auto (fully automatic) as well as manual mode with a provision of selection through Auto/Manual switch and all related components & schemes.***

5.2.1 Normally the float charger operating in parallel with the 110 V, Battery ***set*** and the load, shall supply the DC load of the sub station and also provide the trickle charge for keeping the battery ***set*** floating totaling up to full capacity. For this condition, the float charger shall be designed to ***trickle*** charge all the cells of lead acid battery between 110 V to 126 V and supply DC load of the sub station, keeping the load bus bar voltage ***approximately at rated voltage of DC load components by using dropper diodes.***

5.2.2 The float charger shall supply the D.C. output voltage as specified under clause ***4.1*** with +/-1% stability of adjusted value for A.C. ***voltage*** fluctuation as specified under clause ***6.3*** of the specification and for D.C. load variation from zero to 100% load.

5.3. During emergency, when the AC supply fails, the battery shall meet the DC load of the sub stations and in doing so, will get discharged gradually. The battery will need boost charging. For this, a separate charger, called the boost charger shall be required.

5.3.1 Boost charger shall have adequate rating to quick charge the battery fully within 10 hrs. ***(Lead Acid) / 5 hrs (Ni-Cd)*** after an emergency during which the complete DC loads is met by the battery.

5.3.2. ***During*** boost charging the battery, the charger may also be ***required*** to supply the DC load of the sub station in case of float charges failure. Based on the condition of battery, it shall be possible to set the boost charging voltage between 100V to 152 V for 55 cells of lead acid battery set ***/ 87 cells of Ni-Cd battery set*** with a total output current between zero to full load capacity of the charger with current stability of 2% of set value with voltage on the load bus bars not exceeding 126.0 volts. The required dropper diodes shall be provided to restrict load bus bar voltage.

5.3.3. Boost charger shall incorporate static components, comprising of silicon controlled rectifiers with necessary protection. Boost charger, apart from its normal constant current operation shall be also capable of constant voltage operation which shall enable it to operate as a float charger delivering stabilized DC output voltage within +/-1% from no load to full load in case of float charger failure. Suitable electrical circuitry shall be provided for this purpose. In the constant current mode it shall have a current stability of +2% of the set value. The constant current setting shall

have step less range from 10% to 100% of full rated current. Further, the boost charger shall have a provision of manual mode of operation, over and above auto-mode of operation. Required circuitry arrangement with auto/manual selector switch etc. shall also be provided for the purpose.

5.3.4 The boost charger and the float charger shall be so interlocked electrically that during boost charging of the battery, the float charger will supply the DC constant load with out supplying to the battery, and at the same time will be in parallel with the battery through a reverse current blocking diode at a suitable tapping. One D.C. contactor may be incorporated which shall get energized through N/C contact of the contractor on A.C. side of the boost charger. In case of failure of A.C. supply, this contractor shall connect the entire battery supply to the load through one of its N/O contacts automatically without any interruption of D.C. supply even of a momentary nature. Under no circumstances the voltage across lower taped terminals shall exceed (+) 10% or fall below (-) 15% of the rated voltage.

5.4. LOAD LIMITING:

The charger shall be provided with load limiting feature for protection against overload. The load limiting curves shall be submitted with the offer. The SCRs / thyristors shall be protected against voltage surge by providing voltage suppressor devices and/or other latest method of protection.

6.0. INCOMING SUPPLY:

6.1. **110 V, Single Phase Battery Charger:**

Single Phase, 240Volts (+10%, -15%), 50 Hz, ± 3%

6.2. **110 V, Three Phase Battery Charger:**

Three Phase, 415Volts (+10%, -15%), 50 Hz, ± 3%

7.0. CHARGER OUTPUT:

7.1 Suitable ripple filtering circuits shall be provided to give a smooth DC output. The ripple content, without connected battery shall be limited to less then ***3%*** on resistive load. The DC output shall be free from switching surges, transients etc.

8.0. SPECIFIC PROVISION:

8.1 As specified under clause-4, the composite charging equipment shall have a separate float charger and a boost charger. Each charger shall consist of the following components and components shall be of the best quality and bill of materials alongwith rating of the same shall be submitted invariably with the offer.

8.1.1 Float charger (Single Phase):

1) Single phase A.C. input ON/OFF main switch (Rotary type)

2) AC input HRC fuse of required capacity.

3) LED type Indicating lamp for AC supply 'ON' indication (After main AC fuse).

4) ***Two winding copper wound*** naturally air cooled single phase transformer ***of adequate rating*** with -15% and 10% ***tapping (5% step)*** on primary side ***with necessary secondary taps*** for achieving required controlled DC output voltage.

5) Full wave half controlled rectifier bridge comprising of silicon diodes and silicon controlled rectifiers (SCR) with R/C surge suppressor net work and suitable heat sink along with free wheeling diodes and semi conductor fuse protection.

6) Ammeter (with external shunt) for measuring DC output current of float charger (0-15 Amps).

7) Auto/ manual mode selector switch.

8) Potentiometer for controlling DC output voltage in auto and manual modes.

9) Suitable filter circuit comprising filter choke, filter condenser with HRC fuse protection & bleeder resistor.

   Bleeder resistor shall be automatically isolated from the circuit, when float charger current reaches to a value which is sufficient to keep the SCRs ON and it comes back into circuit when float charger current decreases to a value just above the hold ON current of the SCR.

10) Blocking diode with suitable heat sink.

11) DC output ON/OFF switch.

12) DC output fuses (HRC).

13) DC 'ON' LED type indicating lamp.

14) Dropper diode selector switch with minimum three positions.

15) Diodes for dropper diode scheme (minimum 10 nos.).

16) Dropper Diode Bypass scheme in case of AC supply fail.

17) Any item not specifically mentioned but ***required*** for efficient working of the ***charger***.

8.1.2 Boost charger (Single Phase):

1) Single phase A.C input ON/OFF main switch (Rotary type)

2) AC input HRC fuse of required capacity.

3) LED type indicating lamp for AC 'ON' indication (After main AC fuse).

4) ***Two winding copper wound*** naturally air cooled single phase transformer ***of adequate rating*** with -15% and 10% ***tapping (5% step)*** on primary side ***with necessary secondary taps*** for achieving required controlled DC output voltage.

5) Full wave half controlled rectifier bridge comprising of silicon diodes and silicon controlled rectifiers (SCR) with R/C surge suppressor net work and suitable heat sink alongwith free wheeling diodes and semi conductor fuse protection.

6) Ammeter (with external shunt) for measuring DC output current of boost charge (0-30 Amps).

7) Auto/ Manual mode selector switch.

8) Constant current/constant voltage mode selector switch.

9) Potentiometer for adjustment of constant current in boost mode.

10) Potentiometer for controlling DC output voltage in float mode (Manual and auto modes).

11) Suitable filter circuit comprising filter choke, filter condenser with HRC fuse protection & bleeder resistor.

Bleeder resistor shall be automatically isolated from the circuit, when float charger current reaches to a value which is sufficient to keep the SCRs ON and it comes back into circuit when float charger current decreases to a value just above the hold ON current of the SCR.

12) Thermal relay for overload protection.

13) Blocking diode with suitable heat sink.

14) Double pole DC output On/OFF switch

15 DC output fuses (HRC).

16) DC 'ON' indication lamp with series resistor

17) Dropper diodes scheme ON/ Off switch..

18) Dropper diodes selector switch with minimum four positions

19) Diodes for diode- dropper scheme (minimum 28 Nos.)

20) Any item not specifically mentioned but ***required*** for efficient working of the charger.

8.1.3 Float Charger (Three Phase):

1) Triple pole A.C. input ON/OFF main switch (Rotary type)

2) AC input HRC fuses of required capacity.

3) Fuse fail and ***phase sequence reversal*** detector (Solid state type) for ***AC input***.

4) LED type indicating lamps for 3 Phase AC supply 'ON' indication (After main AC fuses)

5) ***Two winding copper wound*** naturally air cooled three phase transformer ***of adequate rating*** -15% to +10% ***tapping (5% step)*** on primary side with necessary secondary taps for achieving required controlled DC output voltage.

6) Three Phase, half controlled full wave rectifier bridges comprising of 3 nos. Silicon diodes & 3 Nos. silicon controlled rectifiers (SCR) with R/C surge suppressor net work and suitable heat sink along with free wheeling diodes and semiconductor fuses protection.

7) Fuse fail detector (Solid state type) for semi conductor fuses as above.

8) Ammeter (with external shunt) for measuring DC output current of float charger.

9) Auto/Manual mode selector switch.

10) Potentiometer for controlling DC output voltage in auto & manual control modes.

11) Suitable filter circuit comprising filter choke, filter condenser with HRC fuse protection & bleeder resistor.

    Bleeder resistor shall be automatically isolated from the circuit when float charger current reaches to a value which is sufficient to keep the SCRs ON and it comes back into circuit when float charger current decreases to a value just above the hold ON current of the SCR.

12) Blocking diode with suitable heat sink.

13) D.C. output ON/OFF switch

14) D.C. output fuses (HRC)

15) D.C. 'ON' LED type indicating lamp

16) Dropper diode selector switch with minimum three positions.

17) Diodes for dropper diode scheme (minimum 10 nos.).

18) Dropper Diode Bypass scheme in case of AC supply fail.

19) Any item not specifically mentioned but ***required*** for efficient working of the charger.

8.1.4 Boost Charger (Three Phase):

1) Triple pole A.C. input ON/OFF main switch (Rotary type)

2) AC input fuses of required capacity.(HRC)

3) Fuse fail and ***phase sequence reversal*** detector (Solid state type) for ***AC input***.

4) LED type indicating lamps for 3 Phase AC supply 'ON' indication (After main AC fuses)

5) ***Two winding copper wound*** naturally air cooled three phase transformer ***of adequate rating*** -15% to +10% ***tapping (5% step)*** on primary side with necessary secondary taps for achieving required controlled DC output voltage.

6) Three Phase, half controlled full wave rectifier bridges comprising of 3 nos. Silicon diodes & 3 Nos. silicon controlled rectifiers (SCRs) with R/C surge suppressor net work and suitable heat sink along with free wheeling diodes and semiconductor fuses protection.

7) Fuse fail detector (Solid state type) for semi conductor fuses as above).

8) Ammeter (with external shunt) for measuring D.C. output current of boost charger.

9) Auto/manual mode selector switch.

10) Constant current/ constant voltage mode selector switch.

11) Potentiometer for adjustment of constant current in boost mode.

12) Potentiometer for controlling D.C. output voltage in float mode (Manual and auto control modes).

13) Suitable filter circuit comprising filter choke, filter condenser with HRCfuse protection & bleeder resistor.

    Bleeder resistor shall be automatically isolated from the circuit when float charger current reaches to a value which is sufficient to keep the SCRs ON and it comes back into circuit when float charger current decreases to a value just above the hold ON current of the SCR.

14) Thermal relay for overload protection

15) Blocking diode with suitable heat sink.

16) Double pole D.C. output ON/OFF switch

17) D.C. output fuses (HRC)

18) D.C. 'ON' LED type indicating lamp

19) Dropper diodes scheme ON/ Off switch.

20) Dropper diodes selector switch with minimum four positions

21) Diodes for dropper diodes scheme (minimum 28 Nos.)

22) Any item not specifically mentioned but ***required*** for efficient working of the charger.

8.1.5 Common Components (Three Phase & Single Phase charger):

1) D.C. voltmeter double pole 4 positions rotary type to measure DC voltage across float section, boost section, load and battery with HRC fuse protection.

2) AC voltmeter to measure the AC input voltage with suitable fuse, link and selector switch arrangement.

   a) Range 0-300 V for single phase charger.

   b) Range 0-500 V for three phase charger.

3) D.C. charge / discharge ammeter with suitable external shunt to read discharge / charge currents of the battery. ***Ammeter range shall be as per the current rating of charger.***

4) Ammeter (Range 100-0-100 mA) showing the earth leakage current of the charger &outgoing ckt (load side).

5) Space heater ***(80W)*** with thermostat ***(05-85 °C),*** ON/OFF switch and required fuse.

6) The charger shall be provided with horizontal CFL tube of 14W with fixture including reflector, front cover etc. It shall be controlled by door operated switch.

7) Detachable cable gland plates ***of M.S. Sheet***, ***min. 2 Nos.*** for cable entry from bottom ***and size suitable for required cables.***

8) DC contactor inter-locked with boost charger AC contactor.

9) Silicon blocker diode with suitable heat sink to be connected to a suitable tapping of battery to maintain DC continuity during power failure while batteries are on boost charge.

10) ***Multi***pin socket ***(15A, 230V rating)*** with switch and fuse.

11) Foundation bolts as per requirements.

12) All switches shall be rotary type.

13) Lifting lugs.

Note:

1. All selector switches shall be rotary stay put type with adequate rating.

2. All Ammeters shall be of analogue type with 90 deg. dial scale and size 96x96 sq.mm.

3. The LED type indicating lamp shall be of 7 segment type with overall diameter of lamp shall be 30 mm while that of cut out shall be 22.5 mm.

4. All equipments/components shall be of adequate rating as per Battery charger requirement.

8.1.6 SCADA Compatibility (If specified in schedule – A)

The Battery Charger shall be fully SCADA compatible. It shall have sufficient Nos of potential free contacts & transducers (4-20mA output) for digital and analogue signals respectively. It shall also be possible to control various functionality of Battery Charger from SCADA system through hard wire connection.

Typical I/O requirement is tabulated here under. The exact number and description shall be as per detailed engineering.

PARAMETERS	DIGITAL INPUTS	CONTROL OUTPUTS	ANALOGUE INPUTS (4-20mA)
AC mains fail	√		
Load Bus Over Voltage	√		

Load Bus Under Voltage	√		
Float Charger fail	√		
Earth Leakage	√		
Float Charger On	√	√	
Float Charger Off	√	√	
Float Charger on Auto mode	√		
Float Charger on Manual mode	√		
Boost Charger On	√	√	
Boost Charger Off	√	√	
Boost Charger On CV mode	√	√	
Boost Charger On CC mode	√	√	
Charger on local mode	√		
Charger on Remote mode	√		
Battery Voltage			√
Boost Voltage			√
Float Voltage			√
Load Voltage			√
Battery Current			√
Boost Current			√
Float Current			√
Load Current			√
Battery Room Temperature			√

9.0 OUTGOING CIRCUITS:

9.1 The following outgoing circuit comprising of a double pole ON-OFF rotary switch HRC fuses and LED type indicating lamps (The over all diameter of lamp shall be 30 mm while that of cut out shall be 22.5 mm) shall be provided.

a) Single Phase charger:

i) 10 Amps feeder 5 Nos.

ii) 15 Amps feeder 2 Nos.

b) Three phase charger :

i) 50 Amps feeder 2 Nos.

ii) 30 Amps feeder 3 nos.

iii) 20 Amps feeder 5 Nos.

10.0 PROTECTION AND ANNUNCIATION:

Following protection with alarm indicating lamps and alarm accept push button and lamp test push button shall be included in the scope of supply.

a) Single phase Charger:

i) Load under voltage relay

ii) DC Earth leakage relay.

iii) Float charger failure

iv) Boost Charger fail

v) Main AC supply fail

vi) DC over voltage relay for battery protection.

vii) Semiconductor Fuse fail - Float

viii) Semiconductor Fuse fail - Boost

b) Three phase Charger.

i) Load under voltage relay

ii) DC Earth leakage relay.

iii) Float charger failure

iv) AC mains failure

v) DC over voltage relay for battery protection.

vi) Boost charger failure.

vii) HV phase fail/phase sequence reversal protection.

viii) Semiconductor Fuse fail - Float

ix) Semiconductor Fuse fail - Boost

x) AC input Fuse fail – Float

xi) AC input Fuse fail - Boost

11.0 Looking to the detailed description of duty requirements of both he chargers and the battery, the manufacturer, shall design a circuit which shall be capable of providing complete protection to various components of the unit and automatic circuit with automatic voltage regulator in the float circuit operation of the unit without-interruptions.

12.0 Necessary product information, booklets, drawings circuit diagram, operating ***&*** maintenance manuals, ***FQP***, type test ***reports as per applicable standards***, ***supply & performance certificate*** etc. ***shall*** be submitted along with the offer.

13.0 ***Successful bidder shall submit the following drawings in duplicate for approval.***

a) GA drawings – Front view, Rear view, Top view, Side View, Internal front view, Internal rear view, Sectionalized side view.

b) Foundation drawing showing cable cutouts and foundation bolt pockets.

c) Rating plate details.

d) Float cum boost charger circuit schematic.

e) Float charger circuit schematic.

f) Annunciation and indication circuit schematic.

g) DC distribution circuit schematic.

h) Illumination and heating circuit schematic.

i) Terminal block details.

j) Bill of material.

13.0 TESTS:

13.1 TYPE TESTS

All type test reports as per ***applicable*** Standard ***for Battery chargers shall be submitted***. Rectifier transformers shall be conform to all type tests specified in IS : 4540 and short circuit test as per IS : 2026. The type test reports from NABL approved laboratory shall ***not be older than seven years from the expiry of the validity of the offer. Tests shall be carried out as per procedures specified in Annexure-I.***

1. Voltage regulation test
2. Load limiter characteristics test
3. Measurement of Efficiency.
4. High voltage tests
5. Temperature rise test
6. Short circuit test at no load and full load at rated voltage for sustained short circuit.
7. Degree of protection test ***– IP 42***
8. Measurement of ripple by Oscilloscope
9. Temperature compensation feature demonstration
10. Type test reports of Rectifier Transformers - all tests as specified in IS : 4540 and short circuit test as per IS : 2026

Important Note:

In case of non-submission of some of the valid type test reports, the bidder shall confirm the submission of same before commencement of supply, without affecting delivery schedule, from NABL accredited laboratory, free of cost. In absence of this confirmation, the offer will be evaluated as non-submission of type test report.

13.2 ACCEPTANCE / ROUTINE TESTS

The following test shall be carried out by the manufacturer on each battery charger.

1) Visual inspection and dimensions.

2) Checking of wiring & continuity of circuits

3) Insulation resistance.

4) HV test

5) Ripple content measurement

6) Voltage regulation test

7) Measurement of efficiency

8) Operational tests for protection, alarm, indication.

9) Auto/Manual operation test.

14.0 Three sets of each of detailed dimensional drawings, commissioning and operating instructions manual, literature, write up and test certificates of bought out items shall be supplied with the each batter charger.

15.0 PACKING / MARKING:

The charger shall be dispatched securely packed in wooden crates suitable for handling during transit by Rail / Road, so as to avoid any loss or damage during transit.

16.0 UNPRICED SCHEDULE:

Unpriced schedule (without price) of offered items shall be submitted along with the Technical Bid.

Note:

In case the rating of the battery charger asked in schedule-A is different than mentioned in this specification then all the components and equipments shall be ***adequate to meet the specified rating.***

APPENDIX – I

GUARANTEED TECHNICAL PARTICULARS FOR 110V DC, SINGLE PHASE BATTERY CHARGER TO BE FILLED IN BY BIDDER WHEREVER NOT SPECIFIED BY BUYER.

Important Note: Bidder is not liable to indicate any change in parameters specified by buyer.

Sr. No.	Parameter	Specified (by buyer)	Offered (by Bidder)
1)	Manufacturer		
2)	Type & Designation (as per type test report)		
3)	**Product Specification Sheet**		
	Constructional details		
4)	Colour Shade	Light Grey as per 631 of IS:5	
a)	Outside		
b)	Inside		
c)	***Mounting Plate***	***Egg shell white***	
d)	***Paint thickness*** ***Nos. of coats***	***60-100 micron*** ***Two***	
5)	Thickness of CR sheet steel	3 mm for load bearing parts & 2 mm for others	
a)	All sides		
b)	Doors		
c)	***Gland Plates***	***2 Nos, 3 mm***	
d)	Reinforced by M.S. angle frame	***Angle Size : Min. 25 x 25 x 3 mm***	
6)	Degree of Protection	**IP 42**	
7)	Indoor type		
8)	Floor mounting		

9)	Free standing		
10)	Naturally air cooled type		
11)	Designed for continuous operation in a ambient temperature of 50°C		
12)	Gaskets		
a)	Material	Neoprene / Synthetic Rubber	
b)	Size		
13)	Recommended clearance at rear		
14)	Input AC supply	1 - Ph, 240 V, 50 Hz (+10 % , -15 % for Voltage & + / - 3% for Frequency)	
15)	Output DC		
a)	Float Charger	110 to 126 V	
b)	Boost Charger	100 to 152 V	
16)	DC Bus Bar		
a)	Material	Electrolytic copper	
b)	Size		
17)	Earthing Bus		
a)	Material	Electrolytic copper	
b)	Size	***19 x 3 sq.mm***	
18)	Wiring	1.1KV FR & C1 copper conductors	
19)	Weight		
20)	Hard ware (N/Bs, Screws etc.)	Brass, Non Ferrous parts	
21)	***Ripple Content at rated Load*** ***- With Battery*** ***- Without Battery***	***< 3%***	
22)	***Guaranteed Efficiency Float section***		

a)	***At 20% Load***	***> 75%***	
b)	***At 50% Load***	***> 80%***	
c)	***At rated Load***		
23)	***Guaranteed Efficiency Float cum Boost section***		
a)	***At 20% Load***	***> 75%***	
b)	***At 50% Load***	***> 80%***	
c)	***At rated Load***		
	General Arrangement		
24)	Charger Size	***For 10/20 Amp***	
a)	Height (mm)	1400 mm	
b)	Width (mm)	1200 mm	
c)	Depth (mm)	450 mm	
25)	Front View		
26)	Hinged Doors		
27)	Door width		
28)	Door Locking Arrangement	At Three Points	
	Meters		
29)	Type & size of Ammeters for	***Analogue 90 Deg Scale, 96x96 Sq.mm***	
30)	Ammeters for		
a)	Float Charger Current		
b)	Boost Charger Current		
c)	Battery Charger Current		
d)	Earth Leakage Current		
31)	Type & size of Voltmeters	***Analogue 90 Deg Scale, 96x96 Sq.mm***	
32)	Voltmeter for		
a)	Charger Voltage		
b)	Input AC Supply		

	Switches		
31)	***Type of Switches***	***Rotary***	
32)	Supply Switches for		
a)	Float Charger AC Input		
b)	Float Charger DC Output		
c)	Boost Charger AC Input		
d)	Battery Charger DC Output		
e)	Feeders - 10 Amp (5 Nos.)		
f)	Feeders - 15 Amp (2 Nos.)		
33)	Voltage Selector Switches for		
a)	DC Voltage		
b)	Input AC Supply		
34)	Mode Selector Switches for		
a)	Float Charger Auto / Manual		
b)	Boost Charger Auto / Manual		
c)	Boost Charger CC / CV		
35)	***Dropper Diode scheme for Float Charger***		
36)	***Dropper Diode scheme for Float Cum Boost Charger***		
a)	ON / OFF		
b)	Selection		
37)	Earth leakage Ammeter switch		
38)	***Setting Potentiometers***		
a)	Float Charger Voltage - Auto		
b)	Float Charger Voltage - Manual		
c)	Boost Charger CV - Auto		
d)	Boost Charger CV - Manual		

e)	Boost Charger CC		
39)	***Indicating Lamps***	***7 segment*** LED Type, ***30mm dia, 22.5 mm cutout***	
a)	Main AC Supply ON		
b)	Boost Charger AC ON		
c)	Float Charger AC ON		
d)	Boost Charger DC ON		
e)	Float Charger DC ON		
f)	Feeder ON (7 Nos.)		
40)	***Alarm Indicating Lamps***	LED Type Lamps / Annunciation Scheme	
a)	AC Mains Fail		
b)	Float Charger Fail		
c)	Battery Over Voltage		
d)	Load Under Voltage		
e)	Earth Leakage		
f)	Boost Charger Fail		
g)	Semiconductor Fuse Fail - Float		
h)	Semiconductor Fuse Fail - Boost		
41)	***Push Buttons***		
a)	Alarm Accept		
b)	Alarm Reset		
42)	***Top View***		
a)	Gland plates		
b)	Foundation Drawing		
c)	Cable cutouts		
d)	Foundation Bolt pockets		
43)	***Rear View***		
a)	Hinged Doors		

b)	Door width		
c)	Door Locking Arrangement	At Three Points	
44)	***Side View***		
a)	Louvers		
b)	Wire mesh behind louvers		
c)	Sectional View (showing Inside Arrangement)		
d)	Earth Bus		
e)	Arrangement of earthing connection		
45)	***Name Plate***		
a)	*Material*		
b)	Make		
c)	Type		
d)	Input Supply	240 V, (+10 % , -15 %), 1-Ph, 50Hz (+ / - 3%)	
e)	DC Output		
	- Boost ***voltage at rated current***	***100 to 152 V***	
	- Float ***voltage at rated current***	***110 to 126V***	
f)	Sr. No.		
g)	Year Of manufacturing		
h)	Weight		
i)	A/T No.		
j)	Property of MePTCL		
46)	***Schematic Drawings***		
a)	AC & DC Circuit		
b)	Boost Charger		
c)	Float Charger		
d)	DC Distribution Circuit		
e)	***SCADA Interface circuit for Transducers and***		

	Contactors (if applicable)		
f)	Annunciation Circuit		
g)	Control Circuit		
	- Float Charger		
	- Boost Charger		
h)	Terminal Block Details	800V grade, stud type	
	- AC supply		
	- Battery		
	- Feeders		
47)	BOM		
48)	**TYPE TESTS**		
a)	Voltage regulation test		
b)	Load limiter characteristics test		
c)	Efficiency tests		
d)	High voltage tests		
e)	Temperature rise test		
f)	Short circuit test at no load and full load at rated voltage for sustained short circuit.		
g)	Degree of protection test		
h)	Measurement of ripple by Oscilloscope		
i)	Temperature compensation feature demonstration		
k)	Type test reports of Rectifier Transformers - all tests as specified in IS : 4540 and short circuit test as per IS : 2026		

GUARANTEED TECHNICAL PARTICULARS FOR 110V DC, THREE PHASE BATTERY CHARGER TO BE FILLED IN BY BIDDER WHEREVER NOT SPECIFIED BY BUYER.

Important Note: Bidder is not liable to indicate any change in parameters specified by buyer.

Sr. No.	Parameter	Specified (by buyer)	Offered (by Bidder)
1)	Manufacturer		
2)	Type & Designation (as per type test report)		
3)	**Product Specification Sheet**		
	Constructional details		
4)	Colour Shade	Light Grey as per 631 of IS:5	
a)	Outside		
b)	Inside		
c)	***Paint thickness Nos. of coats***	***60-100 micron Two***	
5)	Thickness of CR sheet steel	3 mm for load bearing parts & 2 mm for others	
a)	All sides		
b)	Doors		
c)	***Gland Plates***	***2 Nos, 3 mm***	
d)	Reinforcement by MS angles	***Angle Size : Min. 25 x 25 x 3 mm***	
6)	Degree of Protection	**IP 42**	
7)	Indoor type		
8)	Floor mounting		
9)	Free standing		
10)	Naturally air cooled type		

11)	Designed for continuous operation in a ambient temperature of 50°C		
12)	Gaskets		
a)	Material	Neoprene / Synthetic Rubber	
b)	Size		
13)	Recommended clearance at rear		
14)	Input AC supply	3 - Ph 4 wire, 415 V, 50 Hz (+10 % , -15 % for Voltage & + / - 3% for Frequency)	
15)	Output DC		
a)	Float Charger	***110*** to 126 V	
b)	Boost Charger	100 to ***152*** V	
16)	DC Bus Bar		
a)	Material	Electrolytic copper	
b)	Size		
17)	Earthing Bus		
a)	Material	Electrolytic copper	
b)	Size	***19 x 3 sq.mm***	
18)	Wiring	1.1KV FR & C1 copper conductors	
19)	Weight		
20)	Hard ware (N/Bs, Screws etc.)	Brass, Non Ferrous parts	
21)	***Ripple Content at rated Load*** ***- With Battery*** ***- Without Battery***	***< 3%***	
22)	***Guaranteed Efficiency Float section***	-	
a)	***At 20% Load***	***> 75%***	

b)	***At 50% Load***	***> 80%***	
c)	***At rated Load***		
23)	***Guaranteed Efficiency Float cum Boost section***	-	
a)	***At 20% Load***	***> 75%***	
b)	***At 50% Load***	***> 80%***	
c)	***At rated Load***		
	General Arrangement		
24)	Charger Size	***For 30/50-55 Amp***	
a)	Height (mm)	1850mm	
b)	Width (mm)	1450mm	
c)	Depth (mm)	700mm	
25)	Front View		
26)	Hinged Doors		
27)	Door width		
28)	Door Locking Arrangement	At Three Points	
	Meters		
29)	Type & size of Ammeters	***Analogue 90 Deg Scale, 96x96 Sq.mm***	
30)	Ammeters for		
a)	Float Charger Current		
b)	Boost Charger Current		
c)	Battery Charger Current		
d)	Earth Leakage Current		
31)	Type & size of Voltmeters	***Analogue 90 Deg Scale, 96x96 Sq.mm***	
32)	Voltmeter for		
a)	Charger Voltage		
b)	Input AC Supply		
	Switches		

31)	***Type of Switches***	***Rotary***	
32)	Supply Switches for		
a)	Float Charger AC Input		
b)	Float Charger DC Output		
c)	Boost Charger AC Input		
d)	Boost Charger AC Contactor		
e)	Battery Charger DC Output		
f)	Feeders – 50 Amp (2 Nos.)		
g)	Feeders - 30 Amp (3 Nos.)		
h)	Feeders - 20 Amp (5 Nos.)		
33)	Voltage Selector Switches for		
a)	DC Voltage		
b)	Input AC Supply		
34)	Mode Selector Switches for		
a)	Float Charger Auto / Manual		
b)	Boost Charger Auto/ Manual		
c)	Boost Charger CC / CV		
35)	***Dropper Diode scheme for Float Charger***		
36)	***Dropper Diode scheme for Float Cum Boost Charger***		
a)	ON / OFF		
b)	Selection		
37)	Earth leakage Ammeter switch		
38)	***Setting Potentiometers***		
a)	Float Charger Voltage - Auto		
b)	Float Charger Voltage - Manual		

c)	Boost Charger CV - Auto		
d)	Boost Charger CV - Manual		
e)	Boost Charger CC		
39)	***Indicating Lamps***	***7 segment*** LED Type, ***30mm dia, 22.5 mm cutout***	
a)	Main AC Supply ON		
b)	Boost Charger AC ON	For all the Three Phases	
c)	Float Charger AC ON	For all the Three Phases	
d)	Boost Charger DC ON		
e)	Float Charger DC ON		
f)	Feeder ON (10 Nos.)		
40)	***Alarm Indicating Lamps***	LED Type Lamps / Annunciation Scheme	
a)	AC Mains Fail		
b)	Float Charger Fail		
c)	Battery Over Voltage		
d)	Load Under Voltage		
e)	Earth Leakage		
f)	Boost Charger Fail		
g)	Semiconductor Fuse Fail - Float		
h)	Semiconductor Fuse Fail - Boost		
i)	Phase Seq. Reversal		
j)	***AC Input Fuse fail – Float***		
k)	***AC Input Fuse fail – Boost***		
41)	***Push Buttons***		
a)	Alarm Accept		
b)	Alarm Reset		
42)	**Top View**		
a)	Gland plates		

b)	Foundation Drawing		
c)	Cable cutouts		
d)	Foundation Bolt pockets		
43)	**Rear View**		
a)	Hinged Doors		
b)	Door width		
c)	Door Locking Arrangement	At Three Points	
44)	**Side View**		
a)	Louvers		
b)	Wire mesh behind louvers		
c)	Sectional View (showing Inside Arrangement)		
d)	Earth Bus		
e)	Arrangement of earthing connection		
45)	**Name Plate**		
a)	*Material*		
b)	Make		
c)	Type		
d)	Input Supply	415 V, (+10 %, -15 %), 3-Ph, 50Hz (+ / - 3%)	
e)	DC Output		
	- Boost ***voltage at rated current***	***110*** to 126 V	
	- Float ***voltage at rated current***	100 to ***152*** V	
f)	Sr. No.		
g)	Year Of manufacturing		
h)	Weight		
i)	A/T No.		
j)	Property of MePTCL		
46)	**Schematic Drawings**		

a)	AC & DC Circuit		
b)	Boost Charger		
c)	Float Charger		
d)	DC Distribution Circuit		
e)	***SCADA Interface circuit for Transducers and Contactors (if applicable)***		
f)	Annunciation Circuit		
g)	Control Circuit		
	- Float Charger		
	- Boost Charger		
h)	Terminal Block Details		
	- AC supply		
	- Battery		
	- Feeders		
47)	BOM		
48)	**TYPE TESTS**		
a)	Voltage regulation test		
b)	Load limiter characteristics test		
c)	Efficiency tests		
d)	High voltage tests		
e)	Temperature rise test		
f)	Short circuit test at no load and full load at rated voltage for sustained short circuit.		
g)	Degree of protection test		
h)	Measurement of ripple by Oscilloscope		
i)	Temperature compensation feature demonstration		
k)	***Type test reports of Rectifier Transformers - all tests as specified in IS : 4540 and short circuit test as per IS : 2026***		

ANNEXURE - I
Type test procedure for Battery Charger

Sr. No	Test description
1	**Voltage regulation test:** **A) Float charger B) Float mode of boost charger:** **Test condition: -** • The adjustment of output voltage at no load is verified by front panel Potentiometer. • Output voltage of charger is set at maximum voltage setting and input voltage is varied from -15% & +10% of nominal volts; Variation in output voltage is verified. • The unit is loaded up to 100% rated load and output voltage is observed. Under this condition, the input voltage is varied as specified above and variation in output voltage is verified. Regulation should be limited to or less than ±1% of rated output voltage of the charger
2	**Load limiter characteristics test: -** **A) Float charger B) Float mode of boost charger:** **Test Condition: -** • The current limit potentiometer is adjusted such that current limit starts beyond 100% load i.e. current beyond rated current. Now Load resistance is reduced and drooping characteristic of output voltage is verified.
3	**Efficiency test:** **To be carried out on Float Charger & Boost Charger separately at max. Power rating.** **Test condition: -** • **Float charger: -** Efficiency test is carried out at nominal AC input voltage , DC output voltage adjusted to maximum voltage setting, by loading only the Float charger at 20%, 50%, & 100% load of rated current at Feeder Terminals & keeping the Boost charger 'OFF'. AC input power is measured by Digital/Analog Power Meter and DC output is measured by calibrated Voltmeter and Ammeter other than the provided in the Float charger. • **Boost Charger: -** Efficiency test is carried out as per above procedure for Boost Charger keeping float charger 'OFF' & adjusting maximum voltage setting at Battery Terminals with Boost Charger constant current setting at 20% 50% & 100% load of rated current with the help of suitable resistors at Battery Terminals. Efficiency should be better than 75% at 20% load & better than 80% at 50 % & 100% load as per GTP.
4	**High voltage test:** **Test condition: -** • The power frequency voltage of 2 KV shall be applied between AC circuit & Earth, DC circuit & Earth and AC circuit & DC circuit for 1 Minute. During High Voltage Test, all low voltage circuits (Electronics circuit, Lamps etc.) are isolated and gate – cathode, anode – cathode terminals are shorted. Charger should withstand it and there shall not be any mal function or deformation and it should work satisfactory after the test.

5	**<u>Temperature rise test: -</u>** **Test Condition: -** • Rated mains supply is to be applied to charger. Float charger DC Output voltage to be set to maximum voltage setting & load current is to be adjusted to 100% rated load of float charger at feeder terminals & **simultaneously** Boost charger DC Output current is to be set to 100% rated load of boost charger by variation of set boost current potentiometer on front panel. Battery terminal voltage is to be adjusted to maximum voltage setting of Boost Charger by varying the resistive load connected to 'Battery Terminals'. Temperature readings of ambient temperature, Float & Boost Rectifier Stack heat sink, windings & cores of Float & Boost Rectifier Transformer & filter choke, & to be noted for every hour, till temperature rise is stable. After completion of this test Normal functioning of the battery Charger to be verified by carrying out the following tests: 1) High voltage. 2) Voltage regulation test. 3) Short circuit Test
6	**<u>Short circuit test at no load and full load at rated voltage for sustained short circuit at load Terminals:</u>** **A) Float charger (Auto mode). B) Float mode of Boost charger (Auto Float)** **Test condition: -** • This test is carried out on LOAD TERMINALS with Float charger & Float mode of Boost Charger. The output DC voltage at load terminal is adjusted maximum voltage setting with rated AC input volts. The load terminals are shorted with following test conditions. 1) No load at load terminals 2) Full load of rated current at Load Terminals. In no load condition, the load terminals are shorted first and then charger is switched ON. Moreover, in full load condition, increase the load from rated current100% to till short circuit at LOAD TERMINALS. The Battery Charger should sustain this short circuit with mains variation from -15% & +10% of nominal input volts and the Battery charger should function normal after removal of short circuit at load terminals.
7	**<u>Temperature Compensation Feature Demonstration test:</u>** **Auto Float Charger** **Test condition: -** • To observe that DC output of Battery Charger changes proportional to 4-20 mA input signal available from temperature transducer. The required change in output voltage is 3mv per 1^{0}C (degree centigrade) per cell of 2volts of L. A. Battery. The temperature transducer produces 1mA signal per 2.5^{0}C change in ambient temperature. Therefore for 55 Cells (110V Battery Set), it will be 7.5mV x 55 Cells = 0.4125V per mA. The charger output voltage should decrease by 0.4125V for increase of 1 mA and vice-verse. The reference temperature is 27°C at which 11mA signal will be available from transducer. The charger output should be set to 121V(i.e. rated output) at 11mA signal. The input signal should be changed from 4 mA to 20mA & DC output should be observed. The DC output should vary @ 0.4125Volts per mA. Similarly, for 110 Cells (220V Battery Set), it will be 7.5mV x 110 Cells = 0.8250V per mA. The charger output voltage should decrease by 0.8250V for increase of 1 mA and vice-verse. The charger output should be set to 242V (i.e. rated output) at 11mA signal. The input signal should be changed from 4 mA to 20mA & DC output should be observed. The DC output should vary @ 0.8250Volts per mA.
8	**Degree of protection test: -** • Degree of protection shall be IP 42.

Dated: 08.09.2020

9	**Measurement of ripple by Oscilloscope: -** • AC supply with variation (± 15 %) & Frequency variation (± 3 %) shall be supplied to the charger and ripple in the output voltage at 0, 50 & 100 % load shall be measured with the oscilloscope. It shall be within ± 3 %.

TECHNICAL SPECIFICATIONS

FOR

220 V BATTERY CHARGER

SPECIAL INSTRUCTIONS TO BIDDER

Please read following instructions carefully before submitting your bid.

1. All the drawings, i.e. elevation, side view, plan, cross sectional view etc., in AutoCAD format and manuals in PDF format, for offered item shall be submitted. Also the hard copies as per specification shall be submitted.

2. The bidder shall submit Quality Assurance Plan for manufacturing process and Field Quality Plan with the technical bid.

3. The bidder shall have to submit all the required type test reports for the offered item. ***However in case of partial submission or reports older than specified limit, bidder must submit his confirmation for those type test report/s to be submitted in the event of an order, without affecting delivery schedule, before commencement of supply, free of cost. In absence of this confirmation, the evaluation shall be carried out accordingly as non-submission of type test reports***.

4. The bidder must fill up all the point of GTP for offered item/s. Instead of indicating "refer drawing, or as per IS/IEC", the exact value/s must be filled in.

5. All the points other than GTP, which are asked to confirm in technical specifications must be submitted separately with the bid.

6. The bidder is required to impart training in view of manufacture, assembly, erection, operation and maintenance for offered item, at his works, to the person/s identified by MePTCL, in the event of an order, free of cost. The cost of logistics will be borne by MePTCL.

7. Please note that the evaluation will be carried out on the strength of content of bid only. No further correspondence will be made.

8. The bidder shall bring out all the technical deviation/s only at the specified annexure.

9. The bidder should indicate manufacturing capacity by submitting latest updated certificate of a Chartered Engineer (CE).

TECHNICAL SPECIFICATION OF BATTERY CHARGER SUITABLE FOR 220V, LEAD ACID OR Ni-Cd TYPE BATTERY SETS

1.1. SCOPE :

This specification covers Design, Manufacture, Testing at works and supply of the complete ***three phase*** Battery Charger ***with DCDB*** for 220V Battery sets.

The scope shall also include SCADA compatibility if indicated in schedule-A of respective tender.

1.2. APPLICABLE STANDARDS:

1.2.1. The design, manufacture and performance of the equipment shall comply with all currently applicable standards, regulations and safety codes. Nothing in this Specification shall be construed to relieve the Bidder of their responsibility.

1.2.2. Unless otherwise specified, the battery charger shall conform to the latest applicable Indian / IEC standards and in particulars to the following standards.

a)	IS-3895	-	Specification for rectifier equipment in general
b)	IS-2208	-	Specification for HRC fuses.
c)	IS-1248	-	Specification for Indicating Instruments.
d)	IS-2147	-	Degree of protection for cubicles
e)	IS-375-	-	Specification for wiring
f)	IS-4540	-	Mono crystalline semiconductor rectifier Assemblies and equipment
g)	IS-6619	-	Safety code for semi conductor rectifier equipment.
h)	IS-2026	-	Transformers
i)	IS-2959	-	A.C contactor for voltages not exceeding 1000V
j)	IS-6005	-	Code of practice for phosphating of Iron and Steel.
k)	IS-5921	-	Printed circuit boards.
l)	IS-249	-	Printed circuit boards

1.2.3. The bidder shall clearly state the Standards to which the equipment offered by him conforms.

1.3. CONSTRUCTION:

i) It will be indoor, freestanding, floor mounting and naturally air cooled type, designed for continuous operation in the ambient temperature of 50°C. Good ventilation shall be made through side louvers.

ii) Each charging equipment offered shall be housed in a sheet steel cubicle reinforced by angle iron frame and shall be mechanically strong. The cubicle shall be dust and vermin proof. The rear and front door cover of the cubicle shall be hinged and shall have locking arrangement. Thickness of sheet steel shall be ***3*** mm for load bearing members and ***2*** mm for other sides.

iii) All the accessories and equipment shall be of adequate rating to suit the above requirements.

iv) Gland plate: Gland plate of **3** mm thickness for incoming / outgoing cables shall be provided. Earthing with two separate earthing terminals shall also be provided.

v) Dimensions of the Battery charger shall be within the following ***range for 220V, 30/50-55 Amp Battery Charger:***

- Width ***1500-2000*** mm x Depth ***600-800*** mm x Height ***1850-2000*** mm.

For other ratings of Battery Charger minimum dimensions shall be; ≥ Width - 2000 mm x Depth - 800 mm x Height 2000-mm by maintaining sufficient working space as well as adequate clearances which shall be decided during detailed engineering.

vi) All the door mounted equipments as well as equipments mounted inside the cabinet shall be provided with individual riveted /life lasting adhered labels with equipment description engraved.

vii) Electrical indicating instruments shall be flush mounted on the panel with only flange projecting. The dial shall be white with black numbers and lettering.

viii) The electronic control circuitry should have built in feature of soft start so that whenever the charger is switched on, the output voltage should increase gradually.

ix) ***Battery Charger shall be provided with earth bus bar of tinned copper flat, having minimum cross section 19 x 3 Sq. mm flat securely fixed along with base and provision on both the sides of earth bus for connecting purchaser's earthing grid.***

1.3.1. FINISH:

Each cubicle will undergo a through process of de-rusting, cleaning, application of red oxide primer paint followed by the ***two*** coats of light grey synthetic enamel paint shade 631 of IS: 5. ***Paint thickness shall be 60 to 100 microns.***

1.3.2. WIRING:

All chargers will be complete with internal wiring and input and output terminals. The components shall be liberally rated. Standard colour code practice shall be followed, with the use of ferrule for numbering and identification of wires. 1.1 KV grade FR & C1 type copper conductor of suitable size shall be used. All hardware such as screws nuts, studs, washers shall be of brass and no ferrous parts shall be used in electrical circuitry control / power.

1.3.3 RATINGS:

The charger for 220V batteries consisting of 110 Nos., 2.0 Volts Lead Acid ***(Tubular/Plante')*** battery set shall have following output ratings.

In case of Ni-Cad battery set (If specified in schedule-A) having equivalent nos. of 1.2 V Ni-Cad cells, the charger output ratings shall be in accordance to the requirement of Ni-Cad battery.

(a) 220 V Battery charger (Three phase):

(i) Float charging and load current ratings:
30 Amp / ***60Amp / 70Amp / 100Amp*** at 220 V to 252 V D.C.

(ii) Boost charging current rating:
50 Amps / ***55Amp / 60Amp / 70Amp / 80Amp / 100 Amp*** at 198 V to 296/***302*** V D.C.

1.4. DUTY:

1.4.1. The composite charger shall consist of two separate chargers, viz. the float charger and the boost charger. The charger shall be required to cater the following requirements.

1.4.2. The float section of the charger shall be compatible to operate in auto (fully automatic) as well as manual mode with a provision of selection through Auto/Manual switch and all related components & scheme.

1.4.2.1. Normally the float charger shall operate in parallel with the 220 V, battery ***set*** and the load. The float charger shall supply the DC loads of the sub-station and also provide the trickle charge for keeping the battery ***set*** floating totaling up to full capacity. For this condition, the float charger shall be designed to ***trickle*** charge all the cells between 220 V to 252 V and supply DC load of the sub-station, keeping the load bus-bar voltage ***approximately at rated voltage of DC load components by using dropper diodes***.

1.4.2.2. The float charger shall supply the DC output voltage as specified in Cl. 1.3.3.a.(i) with + / - 1% stability of adjusted value for AC ***voltage*** fluctuations as specified at Cl. 1.5.2 of the Specification and for DC load variation from zero to 100% load.

1.4.3. During emergency, when the AC supply fails, the battery shall meet the DC load of the sub-station and in doing so, will get discharged gradually. The battery will need boost charging, for which, a separate charger, called the boost charger shall be required.

1.4.3.1. Boost charger shall have adequate rating to quick charge the battery fully within 10 hrs ***(Lead Acid) / 5 hrs (Ni-Cd)*** after an emergency during which the complete DC load is met by the battery.

1.4.3.2. ***During*** boost charging the battery ***set***, the charger may also be ***required*** to supply the DC load of the sub-station incase of float charger failure. Based on the condition of the battery, it shall be possible to set the boost charging voltage between 198 V to 296/***302(Plante')*** V for 110 / ***174 (Ni-Cd)*** cells with a total output current between zeros to full load capacity of the charger with the voltage on the load bus bar not exceeding 252 volts. The required dropper diodes shall be provided to restrict load bus bar voltage.

1.4.3.3. Boost charger shall incorporate static components comprising silicon-controlled rectifiers with necessary protection. Boost charger, apart from normal constant current operation shall also be capable of

constant voltage operation which shall enable it to operate as a float charger delivering stabilized DC output voltage within + / - 1 % from no load to full load in case of float charger failure. Suitable electrical circuitry shall be provided for this purpose. In the constant current mode it shall have a current stability of +2% of the set value. The constant current setting shall have step less range from 10 % to 100 % of full rated current. Further, the boost charger shall have a provision for manual mode of operation, over and above auto mode of operation. Required circuitry arrangement with auto / manual selector switch etc. shall also be provided for the purpose.

1.4.3.4. The boost charger and the float charger shall be so interlocked electrically that during boost charging of the battery, the float charger will supply the DC constant load without supplying to the battery, and at the same time will be in parallel with the battery through a reverse current blocking diode at a suitable tapping. One DC contactor may be incorporated which shall get engaged through N/C contact of the contactor on AC side of the boost charger. In case of failure of AC supply, this contactor shall connect the entire battery supply to the load through one of its N/O contacts automatically without any interruption of DC supply even of a momentary nature. Under no circumstances the voltage across lower tapped terminals shall exceed (+) 10% or fall below (-) 15% of the rated voltage.

1.4.4. LOAD LIMITING:

1.4.4.1. The charger shall be provided with load limiting feature for protection against over load. The load limiting curves shall be submitted with the offer. The SCRs / Thyristors shall be protected against voltage surges by providing voltage suppressor devices and/or other latest method of protection.

1.5. INCOMING SUPPLY:

Three Phase, 415Volts (+10%, -15%), 50 Hz, ± 3%

1.6. CHARGER OUTPUT:

Suitable ripple filtering circuits shall be provided to give a smooth DC output. The ripple content, without the battery connected shall be limited to less than ***3%*** on resistive load. The DC output shall be free from switching surges, transients, etc.

1.7. SPECIFIC PROVISIONS:

As specified in Clause – 1.4.1, the composite charging equipment shall have a separate float charger and a boost charger. Each charger shall consist of the following components and components shall be of the best quality and bill of materials along with rating of the same shall be submitted invariably with the offer.

1.7.1. Float Charger (Three Phases):

1) Three phase AC input ON / OFF main switch
2) AC input HRC fuses
3) Fuse fail and ***phase sequence reversal*** detector (Solid state type) for ***AC input***.
4) LED type Indicator for AC supply „ON" indication (after main AC fuse).
5) ***Two winding copper wound*** naturally air cooled ***three*** phase transformer ***of adequate rating*** with -15% to +10 % ***tapping (5% step)*** on primary side with necessary secondary tapes for achieving required control DC output voltage.
6) Full wave controlled Rectifier Bridge comprising of silicon diodes and silicon controlled rectifiers (SCR) with R/C surge suppressor net work and suitable heat sink along with free wheeling diodes and semi conductor fuse protection.
7) Fuse fail detector (Solid state type) for semi conductor fuses
8) Ammeter of (with external shunt) for measuring DC output current of float charger
9) Auto / manual mode selector switch.
10) Potentiometer for controlling DC output voltage in auto and manual modes.
11) Suitable filter circuit comprising filter choke, filter condenser with HRC fuse protection and bleeder resistor.

    Bleeder resistor shall ***be*** automatically isolated from the circuit, when float charger current reaches to a value which is sufficient to keep the SCRs ON and it comes back into circuit when float charger current decreases to a value just above the hold ON current of the SCR.

12) Blocking diode with suitable heat sink.
13) DC output ON / OFF switch.
14) DC output fuses (HRC type).
15) DC „ON" LED type indicating lamp
16) ***Dropper diode selector switch with minimum three positions.***
17) ***Diodes for dropper diode scheme (minimum 20 nos.).***
18) ***Dropper Diode Byepass scheme in case of AC supply fail***

19) Any item not specifically mentioned, but ***required for*** efficient working of the equipment.

1.7.2. Boost Charger (Three Phase)

1) Three phase AC input ON / OFF main switch
2) AC input HRC fuse of required capacity
3) Fuse fail and ***phase sequence reversal*** detector (Solid state type) for ***AC input***.
4) LED type Indicator for AC supply „ON" indication indicating lamp for AC supply „ON" indication (after main AC fuse).
5) ***Two winding copper wound*** naturally air cooled ***three*** phase transformer ***of adequate rating*** with -15% to +10 % ***tapping (5% step)*** on primary side with necessary secondary tapes for achieving required control DC output voltage.
6) Full wave controlled Rectifier Bridge comprising of silicon diodes and silicon controlled rectifiers (SCR) with R/C surge suppressor net work and suitable heat sink along with free wheeling diodes and semi conductor fuse protection.
7) Fuse fail detector (Solid state type) for semi-conductor fuses
8) Ammeter of (with external shunt) for measuring DC output current of float charger
9) Auto / manual mode selector switch
10) Constant current constant voltage mode selector switch.
11) Potentiometer for adjustment of constant current in boost mode.
12) Potentiometer for controlling DC output voltage in float mode (auto and manual modes).
13) Suitable filter circuit comprising filter choke, filter condenser with HRC fuse protection and bleeder resistor.

    Bleeder resistor shall ***be*** automatically isolated from the circuit when float charger current reaches to a value which is sufficient to keep the SCRs ON and it comes back into circuit when float charger current decreases to a value just above the hold ON current of the SCR.
14) Thermal relay for overload protection.
15) Blocking diode with suitable heat sink.
16) Double pole DC output ON / OFF switch.
17) DC output fuses (HRC).
18) DC „ON" LED type indicating lamp with series resistor.
19) Dropper diode scheme ON / OFF switch.
20) Dropper diode selector switch with minimum four positions.
21) Diodes for dropper diode scheme (minimum ***56*** nos.).
22) Any item not specifically mentioned, but which is needed basically for efficient working of the equipment.

1.7.3 Common Components (Three Phase Charger)

1) DC Voltmeter, double pole 4 position rotary type to measure DC voltage across float section, boost section, load and battery with HRC fuse protection.
2) AC voltmeter to measure the AC input voltage with suitable fuse link and selector switch arrangement.
   a) Range 0 - 500V for Three phase charger.
3) DC charge / discharge ammeter with suitable external shunt to read discharge / charge current of the battery.
4) Ammeter (range 100 – 0 – 100 mA) showing the earth leakage current of the charger & out going circuit (load side).
5) Space heater ***(80W)*** with thermostat ***(30-85 Deg),*** ON / OFF switch and required fuses
6) ***The charger shall be provided with horizontal CFL tube of 14W with fixture including reflector, front cover etc. It shall be controlled by door operated switch.***
7) Detachable cable gland plates ***min. 2 Nos.*** for cable entry from bottom ***and size suitable for required cables***.
8) DC contactor interlocked with boost charger AC contactor.
9) Silicon blocker diode with suitable heat sink to be connected to a suitable tapping of battery to maintain DC continuity during power failure while batteries are on boost charge.
10) ***Multi***pin socket (***15A, 230V rating)*** with switch and fuse.
11) ***Foundation bolts as per requirements.***
12) ***All switches shall be rotary type.***
13) ***Lifting lugs***

Note:

1. ***All selector switches shall be rotary stay put type with adequate rating***
2. ***All Ammeters shall be of analogue type with 90 deg. dial scale and size 96x96 sq.mm.***
3. ***The LED type indicating lamp shall be of 7 segment type with overall diameter of lamp shall be 30 mm while that of cut out shall be 22.5 mm.***
4. ***All equipments/components shall be of adequate rating as per Battery charger requirement.***

1.7.4 SCADA Compatibility (If specified in schedule – A)

The Battery Charger shall be fully SCADA compatible. It shall have sufficient Nos of potential free contacts & transducers (4-20mA output) for digital and analogue signals respectively. It shall also be possible to control various functionality of Battery Charger from SCADA system through hard wire connection.

Typical I/O requirement is tabulated here under. The exact number and description shall be as per detailed engineering.

PARAMETERS	DIGITAL INPUTS	CONTROL OUTPUTS	ANALOGUE INPUTS (4-20mA)
AC mains fail	√		
Load Bus Over Voltage	√		
Load Bus Under Voltage	√		
Float Charger fail	√		
Earth Leakage	√		
Float Charger On	√	√	
Float Charger Off	√	√	
Float Charger on Auto mode	√		
Float Charger on Manual mode	√		
Boost Charger On	√	√	
Boost Charger Off	√	√	
Boost Charger On CV mode	√	√	
Boost Charger On CC mode	√	√	
Charger on local mode	√		
Charger on Remote mode	√		
Battery Voltage			√
Boost Voltage			√
Float Voltage			√
Load Voltage			√
Battery Current			√
Boost Current			√
Float Current			√
Load Current			√
Battery Room Temperature			√

1.8 OUT GOING CIRCUITS:

The following out going circuits comprising of a double pole ON – OFF rotary switch, HRC fuses and LED type indicating lamps shall be provided. The separate DCDB shall be provided with battery charger which shall include all DC distribution feeders stated below.

1) 50 Amps. Feeders: 2 Nos.
2) 30 Amps. Feeders: ***3*** Nos.
3) 20 Amps. Feeders: ***5*** Nos.
4) 10 Amps. Feeders: 4 Nos.

1.9 PROTECTION AND ANNUNCIATION:

Following ***alarms*** with alarm indicating lamps and alarm accept push button and lamp test push button shall be included in the scope of supply.

1) Load under voltage
2) DC Earth leakage
3) Float charger fail
4) ***Main*** AC ***supply*** fail
5) DC over voltage relay for battery protection.
6) HV phase fail/phase sequence reversal protection
7) Boost charger failure
8) Semiconductor Fuse Fail - Float
9) Semiconductor Fuse Fail – Boost
10) ***AC Input Fuse fail – Float***
11) ***AC Input Fuse fail – Boost***

1.10 Looking to the detailed description of duty requirements of the charger and the battery, the manufacturer shall design a circuit which shall be capable of providing complete protection to various components of the unit and automatic i.e. with automatic voltage regulator in the float circuit operation of the unit without interruption.

1.11 Necessary product information booklet, drawings, circuit diagrams, operation ***&*** maintenance manual, all the type test ***reports*** as per applicable standards, ***supply & performance*** certificate etc. ***shall*** be submitted along with the offer.

1.12 ***Successful*** bidder shall submit the ***following*** drawings in duplicate for approval.

a) GA drawings – Front view, Rear view, Top view, Side View, Internal front view, Internal rear view, Sectionalized side view.
b) Foundation drawing showing cable cutouts and foundation bolt pockets.
c) Rating plate details.
d) Float cum boost charger circuit schematic.
e) Float charger circuit schematic.
f) Annunciation and indication circuit schematic.
g) DC distribution circuit schematic.
h) Illumination and heating circuit schematic.
i) Terminal block details.
j) Bill of material.

1.13 TESTS:

TYPE TESTS:-

The following type test reports from NABL accredited laboratory as per ***applicable*** standard ***for*** Battery chargers shall ***be submitted with technical bid***. Rectifier transformers shall conform to all type tests specified in IS: 4540 and short circuit test as per IS: 2026. The type test reports shall ***not be older than seven years from the expiry of the validity of the offer. Tests shall be carried out as per procedures specified in Annexure-I.***

1. Voltage regulation test
2. Load limiter characteristics test
3. ***Measurement of*** Efficiency
4. High voltage test
5. Temperature rise test
6. Short circuit test at no load and full load at rated voltage for sustained short circuit.
7. Degree of protection test – ***IP 42***
8. Measurement of ripple by Oscilloscope
9. Temperature compensation feature demonstration
10. Type test reports of Rectifier Transformers - all tests as specified in IS : 4540 and short circuit test as per IS : 2026

Important Note:

In case of non-submission of some the type test reports, the bidder shall confirm the submission of same before commencement of supply, without affecting delivery schedule, from NABL accredited laboratory, free of cost. In absence of this confirmation, the offer will be evaluated as non-submission of type test report.

ACCEPTANCE / ROUTINE TESTS:-

The following test shall be carried out by the manufacturer on each battery charger.

1) Visual inspection and dimensions.
2) Checking of wiring & continuity of circuits
3) Insulation resistance.
4) HV test
5) Ripple content measurement
6) No load test
7) Load test
8) Efficiency tests
9) Operational tests for protection, alarm, indication.
10) Auto/Manual operation test.

1.14 Three sets of each of the detailed dimensional drawings, commissioning and operating instructions manual, literature, write up and test certificates of bought items shall be supplied with each of the battery charger.

1.15 PACKING AND MARKING:

The equipment shall be dispatched securely packed in wooden crates suitable for handling during transit by rail / road, so as to avoid any loss or damage during transit. The crate should be marked with the legible details like Make, Sr.No. , Type of Charger and A/T (purchase order) no. etc.

Note:

In case the rating of the battery charger asked in schedule-A is different than mentioned in specification then ***rating of*** all the components and equipments shall be ***adequate to meet the specified rating***.

SCHEDULE OF GUARANTEED TECHNICAL PARTICULARS FOR BATTERY CHARGER

(To be filled up along with offer of Battery Charger)

GTP IN CHECK LIST FORMAT - 220V BATTERY CHARGER					
	Supplier :-				
	Manufacturer :-				
	Rating / Type :- 220 V Battery Charger for (*250AH/350AH/450AH) LEAD ACID/Ni-Cd* Battery Set				
	Quantity :- Nos.				
Sr. No.		**Parameter**	**Acceptable Design Data**	**Particulars to be filled by bidder**	**Remarks**
		Manufacturer			
		Type & Designation if any			
A		**Product Specification Sheet**			
		Constructional details			
		Colour Shade	Light Grey as per 631 of IS:5		
		Paint thickness Nos. of coats	60-100 micron Two		
		- Outside			
		- Inside			
		Thickness of CR sheet steel	3 mm for load bearing parts & 2 mm for others		
		Gland Plates	2 Nos, 3 mm ,		
		- All sides			
		- Doors			
		Reinforcement by MS angles			
		- Degree of Protection	**IP 42**		
		- Indoor type			
		- Floor mounting			

		- Free standing			
		- Naturally air cooled type			
		- Designed for continuous operation in a ambient temperature of 50 Deg. C			
		- Gaskets			
		- Material	Neoprene / Synthetic Rubber		
		- Size			
		Recommended clearance at rear			
		Input AC supply	3 - Ph 4 wire, 415 V, 50 Hz (+10 % , -15 % for Voltage & + / - 3% for Frequency)		
		Output DC			
		- Float Charger	***220*** to 252V		
		- Boost Charger	198 to ***296 V / 302V***		
		DC Bus Bar			
		- Material	Electrolytic copper		
		- Size			
		Earthing Bus			
		- Material	Electrolytic copper		
		- Size	***19 x 3 sq.mm***		
		Wiring	1.1KV FR & C1 copper conductors		
		Weight			
		Hard ware (N/Bs, Screws etc.)	Brass, Non Ferrous parts		
		Ripple Content at rated Load ***- With Battery*** ***- Without Battery***	***< 3%***		
		Guaranteed Efficiency Float section	-		

		- At 20% Load ***- At 50% Load*** ***- At rated Load***	***> 75%*** ***> 80%***		
		Guaranteed Efficiency Float cum Boost section	-		
		- At 20% Load ***- At 50% Load*** ***- At rated Load***	***> 75%*** ***> 80%***		
B		**GA Drawing**			
		Charger Size	***For 30/50-55 Amp***		
		- Height (mm)	***1850-2000*** mm		
		- Width (mm)	***1500-2000*** mm		
		- Depth (mm)	***600-800*** mm		
		Front View			
		Hinged Doors			
		Door width			
		Door Locking Arrangement	At Three Points		
		Meters			
		Ammeters for			
		Type & size	***Analogue*** ***90 Deg Scale,*** ***96x96 Sq.mm***		
		- Float Charger Current			
		- Boost Charger Current			
		- Battery Charger Current			
		- Earth Leakage Current			
		Voltmeters for			
		Type & size	***Analogue*** ***90 Deg Scale,*** ***96x96 Sq.mm***		
		- Charger Voltage			
		- Input AC Supply			
		Switches			
		Type	***Rotary***		
		Supply Switches for			

		- Float Charger AC Input			
		- Float Charger DC Output			
		- Boost Charger AC Input			
		- Boost Charger AC Contactor			
		- Battery Charger DC Output			
		- ***Feeders – 50 Amp (2 Nos.)***			
		- Feeders - 10 Amp (***3*** Nos.)			
		- Feeders - 20 Amp (***5*** Nos.)			
		- Feeders - 30 Amp (4 Nos.)			
		Voltage Selector Switches for			
		- DC Voltage			
		- Input AC Supply			
		Mode Selector Switches for			
		- Float Charger Auto / Manual			
		- Boost Charger Auto/Manual			
		- Boost Charger CC / CV			
		Dropper Diode scheme for Float Charger			
		Dropper Diode scheme for Float Cum Boost Charger			
		- ON / OFF			
		- Selection			
		Earth leakage Ammeter switch			
		Setting Potentiometers			
		-Float Charger Voltage - Auto			
		- Float Charger Voltage -Manual			
		- Boost Charger CV - Auto			
		- Boost Charger CV - Manual			
		- Boost Charger CC			
		Indicating Lamps	***7 segment*** LED Type, ***30mm dia, 22.5 mm cutout***		
		- Main AC Supply ON			

		- Boost Charger AC ON	For all the Three Phases		
		- Float Charger AC ON	For all the Three Phases		
		- Boost Charger DC ON			
		- Float Charger DC ON			
		- Feeder ON (14 Nos.)			
		Alarm Indicating Lamps	LED Type Lamps / Annunciation Scheme		
		- AC Mains Fail			
		- Float Charger Fail			
		- Battery Over Voltage			
		- Load Under Voltage			
		- Earth Leakage			
		- Boost Charger Fail			
		- Semiconductor Fuse Fail - Float			
		- Semiconductor Fuse Fail - Boost			
		- Phase Seq. Reversal			
		- AC Input Fuse fail – Float			
		- AC Input Fuse fail – Boost			
		Push Buttons			
		- Alarm Accept			
		- Alarm Reset			
		Top View			
		Gland plates			
		Foundation Drawing			
		- Cable cutouts			
		- Foundation Bolt pockets			
		Rear View			
		Hinged Doors			
		Door width			

		Door Locking Arrangement	At Three Points		
		Side View			
		Louvers			
		Wire mesh behind louvers			
		Sectional View (showing Inside Arrangement)			
		Earth Bus			
		Arrangement of earthing connection			
		Name Plate			
		Material			
		Make			
		Type			
		Input Supply	415 V, (+10 %, -15 %), 3-Ph 50Hz (+ / - 3%)		
		DC Output			
		- Boost ***voltage at rated current***	***198 to 296/302 V***		
		- Float ***voltage at rated current***	***220 to 252V***		
		Sr. No.			
		Year Of manufacturing			
		Weight			
		A/T No.			
		Property of MePTCL			
C		Schematic Drawings			
		AC & DC Circuit			
		Boost Charger			
		Float Charger			
		DC Distribution Circuit			
		SCADA Interface circuit for Transducers and Contactors (if applicable)			
		Annunciation Circuit			
		Control Circuit			

		- Float Charger			
		- Boost Charger			
		Terminal Block Details			
		- AC supply			
		- Battery			
		- Feeders			
		BOM			
B		**TYPE TESTS**			
	1	Voltage regulation test			
	2	Load limiter characteristics test			
	3	Efficiency tests			
	4	High voltage tests			
	5	Temperature rise test			
	6	Short circuit test at no load and full load at rated voltage for sustained short circuit.			
	7	Degree of protection test -***IP42***			
	8	Measurement of ripple by Oscilloscope			
	9	Temperature compensation feature demonstration			
	10	***Type test reports of Rectifier Transformers - all tests as specified in IS : 4540 and short circuit test as per IS : 2026***			

ANNEXURE-I
Type test procedure for Battery Charger

Sr. No	Test description
1	**Voltage regulation test:** **A) Float charger B) Float mode of boost charger:** **Test condition: -** • The adjustment of output voltage at no load is verified by front panel Potentiometer. • Output voltage of charger is set at maximum voltage setting and input voltage is varied from -15% & +10% of nominal volts; Variation in output voltage is verified. • The unit is loaded up to 100% rated load and output voltage is observed. Under this condition, the input voltage is varied as specified above and variation in output voltage is verified. Regulation should be limited to or less than ±1% of rated output voltage of the charger.
2	**Load limiter characteristics test: -** **A) Float charger B) Float mode of boost charger:** **Test Condition: -** • The current limit potentiometer is adjusted such that current limit starts beyond 100% load i.e. current beyond rated current. Now Load resistance is reduced and drooping characteristic of output voltage is verified.
3	**Efficiency test:** **To be carried out on Float Charger & Boost Charger separately at max. Power rating.** **Test condition: -** • **Float charger: -** Efficiency test is carried out at nominal AC input voltage , DC output voltage adjusted to maximum voltage setting, by loading only the Float charger at 20%, 50%, & 100% load of rated current at Feeder Terminals & keeping the Boost charger „OFF". AC input power is measured by Digital/Analog Power Meter and DC output is measured by calibrated Voltmeter and Ammeter other than the provided in the Float charger. • **Boost Charger: -** Efficiency test is carried out as per above procedure for Boost Charger keeping float charger „OFF" & adjusting maximum voltage setting at Battery Terminals with Boost Charger constant current setting at 20% 50% & 100% load of rated current with the help of suitable resistors at Battery Terminals. Efficiency should be better than 75% at 20% load & better than 80% at 50 % & 100% load as per GTP.
4	**High voltage test:** **Test condition: -** • The power frequency voltage of 2 KV shall be applied between AC circuit & Earth, DC circuit & Earth and AC circuit & DC circuit for 1 Minute. During High Voltage Test, all low voltage circuits (Electronics circuit, Lamps etc.) are isolated and gate – cathode, anode – cathode terminals are shorted. Charger should withstand it and there shall not be any mal function or deformation and it should work satisfactory after the test.

5	**<u>Temperature rise test: -</u>** **Test Condition: -** • Rated mains supply is to be applied to charger. Float charger DC Output voltage to be set to maximum voltage setting & load current is to be adjusted to 100% rated load of float charger at feeder terminals & **simultaneously** Boost charger DC Output current is to be set to 100% rated load of boost charger by variation of set boost current potentiometer on front panel. Battery terminal voltage is to be adjusted to maximum voltage setting of Boost Charger by varying the resistive load connected to „Battery Terminals". Temperature readings of ambient temperature, Float & Boost Rectifier Stack heat sink, windings & cores of Float & Boost Rectifier Transformer & filter choke, & to be noted for every hour, till temperature rise is stable. After completion of this test Normal functioning of the battery Charger to be verified by carrying out the following tests: 1) High voltage. 2) Voltage regulation test. 3) Short circuit Test.
6	**<u>Short circuit test at no load and full load at rated voltage for sustained short circuit at load Terminals:</u>** **A) Float charger (Auto mode). B) Float mode of Boost charger (Auto Float)** **Test condition: -** • This test is carried out on LOAD TERMINALS with Float charger & Float mode of Boost Charger. The output DC voltage at load terminal is adjusted maximum voltage setting with rated AC input volts. The load terminals are shorted with following test conditions. 1) No load at load terminals 2) Full load of rated current at Load Terminals. In no load condition, the load terminals are shorted first and then charger is switched ON. Moreover, in full load condition, increase the load from rated current100% to till short circuit at LOAD TERMINALS. The Battery Charger should sustain this short circuit with mains variation from -15% & +10% of nominal input volts and the Battery charger should function normal after removal of short circuit at load terminals.
7	**<u>Temperature Compensation Feature Demonstration test:</u>** **Auto Float Charger** **Test condition: -** • To observe that DC output of Battery Charger changes proportional to 4-20 mA input signal available from temperature transducer. The required change in output voltage is 3mv per 1 ^{0}C (degree centigrade) per cell of 2volts of L. A. Battery. The temperature transducer produces 1mA signal per 2.5 ^{0}C change in ambient temperature. Therefore for 55 Cells (110V Battery Set), it will be 7.5mV x 55 Cells = 0.4125V per mA. The charger output voltage should decrease by 0.4125V for increase of 1 mA and vice-verse. The reference temperature is 27 ^{o}C at which 11mA signal will be available from transducer. The charger output should be set to 121V(i.e. rated output) at 11mA signal. The input signal should be changed from 4 mA to 20mA & DC output should be observed. The DC output should vary @ 0.4125Volts per mA. Similarly, for 110 Cells (220V Battery Set), it will be 7.5mV x 110 Cells = 0.8250V per mA. The charger output voltage should decrease by 0.8250V for increase of 1 mA and vice-verse. The charger output should be set to 242V (i.e. rated output) at 11mA signal. The input signal should be changed from 4 mA to 20mA & DC output should be observed. The DC output should vary @ 0.8250Volts per mA.

8	**Degree of protection test: -** • Degree of protection shall be IP 42.
9	**Measurement of ripple by Oscilloscope: -** • AC supply with variation (± 15 %) & Frequency variation (± 3 %) shall be supplied to the charger and ripple in the output voltage at 0, 50 & 100 % load shall be measured with the oscilloscope. It shall be within ± 3 %.

ANNEXURE-A

"Renovation & Upgradation of Protection system and Replacement of different Substations equipment's in MePTCL Substations of 132 Kv"

BILL OF QUANTITY

SN	Description Equipments / Items for Replacement	Unit	LS Qty
A	B	C	D
1.00	132kV CB (3-Pole)	Set	22
2.00	33kV CB	Set	16
3.00	132kV CT (1-Ph)	No	66
4.00	33kV CT (1-Ph)	No	45
5.00	132kV Bus PT (1-Ph)	No	9
6.00	33kV PT (1-Ph)	No	3
7.00	132kV line CVT (1-Ph)	No	7
8.00	132kV Surge Arrestor inclusive of counter & insulating base	No	30
9.00	33kV Surge Arrestor & HG inclusive of counter & insulating base	No	30
10.00	132kV 3-Ph Isolator	Set	29
11.00	33kV 3-Ph Isolator	Set	29
12.00	132kV CB Relay Panel for Lines	Nos.	28
13.00	132/33kV Transformer Protection Panel (HV&LV)	Nos.	10
14.00	132kV CB Relay Panel for Buscoupler	Nos.	1
15.00	132kV CB Relay Panel for Capacitor Bank	Nos.	2
16.00	33kV CB Relay Panel for feeder including Protection	Nos.	8
17.00	11kV VCB Indoor Panel with builtin CT, Busbar, etc.	Nos.	6
18.00	Synchronising Trolley Panel	Nos.	4
19.00	Time synchronisation equipment & Time Synchroniser	Nos.	14
20.00	Line Traps 132kV	Nos.	34
21.00	Line matching & distribution Unit	Nos.	34
22.00	Carrier Equipment digital Type	Nos.	17
23.00	Digital Protn. Coupler	Nos.	17
24.00	220V 100A (450AH) Battery Charger & Battery Bank	Set	5
25.00	110V 100A (250AH) Battery Charger & Battery Bank	Set	2
26.00	50V 100 AH Battery Charger & Battery Bank	Set	9
27.00	Transformer Winding Resistance Meter	Set	4
28.00	Insualtion Tesistance (IR) Tester (10 KV)	Set	3
29.00	Automatic Capacitance & Tandelta Measuirng Instrument	Set	2
30.00	Break Down Voltage (BDV) Test Kit for Oil (100KV)	Set	4
31.00	Frequency Resposnce Anaylser (FRA) Test Set	Set	2
32.00	SF6 Gas Leakage Detector	Set	4
33.00	Dew Point Measuring Instrument	Set	4

34.00	Thermovision Camera for detection of hot spots	Set	4
35.00	Thermal Scanner (for Transformer / Reactor)	Set	3
36.00	Transmission Line Response Analyser	Set	2
37.00	CT-PT Analyser Kit	Set	4
38.00	ACHV AC High Voltage Test Set upto 30 KV	Set	2
39.00	Portbale Multi Functional Primary 3 Phase CT Injection Kt	Set	2
40.00	Online Insulating Oil Drying System	Set	31
41.00	Transformer Test Van	Set	1
42.00	Oil Testing Lab	Set	1

Diagnostic Tools

SN	Description	Bidder's Confirmation
1	Transformer Winding Resistance Meter as per enclosed specification.	
2	Insulation Resistance (IR) Tester (10 KV) similar to S1-1068 (Megger) or MIC10K1 (Sonel) or equivalent.	
3	Automatic Capacitance & Tan delta Measuring Instrument similar to DELTA4110 (Megger) or equivalent.	
4	Break Down Voltage (BDV) Test Kit for Oil (100KV) similar to Model: DTA-100C(BAUR) or OTSIOOAF-U KU-PX(Megger) or equivalent	
5	Frequency Response Analyser (FRA) Test Set similar to Model: FRAX99 (Megger) or equivalent.	
6	SF6 Gas Leakage Detector similar to CT-GLD10 (Catsafe) or equivalent.	
7	Dew Point Measuring Instrument similar to Model: BM70 (Vaisala) or equivalent	
8	Thermovision Camera for detection of hot spots similar to Model: Testo 883 (Testo) or equivalent.	
9	Thermal Scanner (for Transformer / Reactor) similar to Model: Testo 890 (Testo) or equivalent.	
10	Transmission Line Response Analyser similar to Model: Teleflex VX (Megger) or equivalent.	
11	CT-PT Analyser Kit similar to Model: MVCT (Megger) or equivalent.	
12	ACHV AC High Voltage Test Set upto 30 KV similar to HPG35 (Megger) or equivalent.	
13	Portable Multi-Functional Primary 3 Phase CT Injection Kt similar to Model: Ingvar (Megger) or CPC100 (Omicron) or equivalent.	
14	Online Insulating Oil Drying System similar to Model: Sitram Dry (Siemens) or equivalent.	
15	Transformer Test Van similar to Model: TTV (Megger) or equivalent.	
16	Oil Testing Lab for complete Testing of Transformer / Mineral Oil upto 100 kV	

- **Bidder/s may supply equivalent or superior models of same make or different make.**
- **Minimum General Technical Specifications are also enclosed herewith.**
- **Bidder may be asked to give demo of the quoted model during technical evaluation in line with tender specification if required by MePTCL.**
- **Bidder must submit documentary of OEM having full-fledged Service Centres in India like ISO, etc.**
- **OEM of the quoted must have manufacturing facilities in India and manufacturing license in regard to same shall be submitted along with the bid.**

(27) Technical Specification For TRANSFORMER WINDING RESISTANCE METER		
Sl No	**Parameters**	**Specifications**
1	Functional Requirement	1. The instrument should be suitable for offline measurement of winding resistance of transformer, including OLTC, and reactors etc. upto 400 kV, in live switchyards upto 400 kV level, as per applicable standards/ testing procedure.
		2. It should have 02 nos. measuring channels for Winding Resistance, 1 for Test Current measurement and 1(optional) for external temperature input.
		3.The instrument should have the facility to connect all the phases of primary as well as secondary winding resistance of the transformer simultaneously without disturbing the transformer internal winding connections
		4. The test results should have repeatability, consistency & immunity to interference in live switchyard upto 400 kV levels.
2	Test Current	Max up to 25 Amp D.C. with selectable current range facility
3	Measurement Range	0-2000 Ω, Auto Ranging.
		The instrument shall be capable of measuring resistance up-to 800 milli-ohms at 25 Amp current and up-to 2 ohms at 10 amp current.
4	Resolution & Accuracy	Resolution: 0.1 μΩ in lowest resistance range.
		Accuracy: Value ± 0.5 % ± 2 Digits
5	OLTC Testing	The kit should be capable of checking (optional) the current v/s time characteristics during the tap change at 25A. It should be able to display the magnitude of current variation during tap change operation in %.The kit should present the transition time from one tap to the next tap in the test results. . It should have the facility for checking the performance of OLTC during tap changing operation of three phases of the transformer simultaneously or sequentially.
6	Demagnetization Facility	The equipment shall have Built-in demagnetization circuitry which shall allow the operator to manually/automatically de-magnetize the transformer core, either before or upon completion of resistance testing, or as a standalone feature.
7	Temperature Sensor	Kit should have facility to measure the temperature with RTD sensor or manual input through software. For manual input separate temperature measuring instrument should be supplied without any extra cost.
8	Open Circuit Voltage	Max. upto 50 V DC.
9	Temperature Correction	The kit should have the facility to have correction of resistance value to a reference temp. i.e. provide temp. compensated reading of resistance (For Copper & Aluminum)

10	Test Lead / Accessories	One complete set of cable of sufficient length (Min 20 Mtr) with suitable clamps & connectors, compatible with the instruments should be provided for successfully carrying out the test in substation. Additionally all the required accessories should be provided for the smooth functioning of kit. Further hard carrying case (which should be robust/ rugged enough) for ensuring proper safety of the kit during transportation shall have to be provided. All the standard accessories for desired monitoring, operation & control of instrument shall have to be provided.
11	Design/Engineering	The complete equipment along with complete accessories must be designed / engineered by Original Equipment Manufacturer.
12	Power Supply	It shall work on input supply variations, Voltage: 230 ±10 %, Frequency: 50 Hz ± 5 % on standard sockets.
13	Operating Temperature	0 to + 50 deg C.
14	Relative humidity	Max. 95% non-condensing.
15	Protection/ Control	The instrument should have facility of automatically discharging the specimen when test is completed or when current cable is accidently disconnected or when instrument power supply is lost. The kit should have built in rapid discharge circuit for automatically discharging the stored energy in the transformer at the end of each test. Kit should also have indication to show the status of discharging.
16	Weight	It should be portable and easy to carry.
17	Software	The software should be suitable for automatic testing & report generation. The kit should have facility to conduct the test through laptop as well as in stand-alone mode.
18	Display/Control	Onboard, large back lit graphic LCD/TFT Display with touch screen. Operation through built-in keypad as well as through external laptop.
18	Printer	In-built thermal printer / external if inbuilt not available.
19	PC Interface	Kit should have RS 232 or USB port for PC interface. Kit shall include supply of one Laptop PC of Dell / Lenovo / hp make with latest specifications such as Min Specs will be as 500GB HDD, 4 GB RAM, Windows 8 64 Bit, Core i3, USB - 2 Nos, Ethernet, 14" display, antivirus software.
20	Memory	Built-in non-volatile memory to store minimum 5000 results.
21	Type Testing	The test kit shall be type tested for Environmental Tests, EMI-EMC & Safety Tests)as per relavent IEC Standardwith latest amendment at any accredited laboratory(accredited by NABL or recognised International accredition body). The type test report should be submitted alongwith the offer.
22	Warranty / Guarantee	18 months form the date of delivery or 12 months form the date of successful & complete commissioning at end user sites, whichever is earlier. If the kit needs to be shifted to supplier's works for repairs within warranty/guaranty period, suppliers will have to bear the cost of repairs, spares and transportation of kit for repair at service center/works.

23	Calibration certificate	Unit shall be duly calibrated at NABL accredited laboratory before supply and the date of calibration shall not be older than two months from the date of supply of the kit.
24	Training	Supplier shall have to ensure that the kit is made user friendly. Apart from detailed demonstration at site, the supplier shall also have to arrange necessary training to end user engineers.
25	After Sales Service	Bidder will have to submit the documentary evidence of having established mechanism in India for prompt services.

(27) Guaranteed Technical Particulars For Transformer Winding Resistance Meter.

The GTP must be furnished only in the following format and in full.

Sl No	Parameters	Specifications	Bidder's particulars
1	Name & address of manufacturer		
2	Type/model details of offered equipment		
3	Applicable Indian/International standard		
4	Functional Requirement	1. The instrument should be suitable for offline measurement of winding resistance of transformer, including OLTC, and reactors etc. upto 400 kV, in live switchyards upto 400 kV level, as per applicable standards/ testing procedure.	
		2. It should have minimum 02 nos. measuring channels for Winding Resistance, 1 for Test Current measurement and 1(optional) for external temperature input.	
		3. The instrument should have the facility to connect all the phases of primary as well as secondary winding resistance of the transformer simultaneously without disturbing the transformer internal winding connections	
		4. The test results should have repeatability, consistency & immunity to interference in live switchyard upto 400 kV levels.	
5	Test Current range	In Ampere	
6	Measurement Range	In ohms	
		Auto ranging(Yes/No)	
		The instrument shall be capable of measuring resistance up-to 800 milliohms at 25 Amp current and up-to 2 ohms at 10 amp current.	
7	Resolution & Accuracy	Resolution (in micro ohms)	
		Accuracy:	

8	OLTC Testing	The kit should be capable of checking (optional) the current v/s time characteristics during the tap change at 25A. It should be able to display the magnitude of current variation during tap change operation in %.The kit should present the transition time from one tap to the next tap in the test results. It should have the facility for checking the performance of OLTC during tap changing operation of three phases of the transformer simultaneously or sequentially.	
9	Demagnetization Facility	The equipment shall have Built-in demagnetization circuitry which shall allow the operator to manually/automatically de-magnetize the transformer core, either before or upon completion of resistance testing, or as a standalone feature.	
10	Temperature Sensor	Kit should have facility to measure the temperature with RTD sensor or manual input through software. For manual input separate temperature measuring instrument should be supplied without any extra cost.	
11	Open Circuit Voltage	In Volt	
12	Temperature Correction	The kit should have the facility to have correction of resistance value to a reference temp. i.e. provide temp. compensated reading of resistance (For Copper & Aluminum)	
13	Test Lead / Accessories. All the required accessories should be provided for the smooth functioning of kit	Length in meters.	
		Original hard carrying case provided.(Yes/No)	
14	Design/Engineering	The complete equipment along with complete accessories must be designed / engineered by Original Equipment Manufacturer.	
15	Power Supply	In volt /frequency	
16	Operating Temperature	In degree centigrade	
17	Relative humidity	In percentage	
18	Protection/ Control	The instrument should have facility of automatically discharging the specimen when test is completed or when current cable is accidently disconnected or when instrument power supply is lost. The kit should have built in rapid discharge circuit for automatically discharging the stored energy in the transformer at the end of each test. Kit should also have indication to show the status of discharging.	
19	Weight	In Kg	
20	Software	The software should be suitable for automatic testing & report generation. The kit should have facility to conduct the test through laptop as well as in stand-alone mode.	

21	Display/Control	Onboard, large back lit graphic LCD/TFT Display with touch screen. Operation through built-in keypad as well as through external laptop.	
22	Printer	In-built thermal printer / external if inbuilt not available.	
23	PC Interface	Type of interface (RS 232/ USB). Laptop to be supplied as per specs. (Yes/No)	
24	Memory	Mention result storage capacity of instrument	
25	Type Testing	The test kit shall be type tested for Environmental Tests, EMI-EMC & Safety Tests)as per relavent IEC Standardwith latest amendment at any accredited laboratory(accredited by NABL or recognised International accredition body). The type test report should be submitted alongwith the offer.	
26	Warranty / Guarantee	18 months form the date of delivery or 12 months form the date of successful & complete commissioning at end user sites, whichever is earlier. If the kit needs to be shifted to supplier's works for repairs within warranty/guaranty period, suppliers will have to bear the cost of repairs, spares and transportation of kit for repair at service center/works.	
27	Calibration certificate	Unit shall be duly calibrated at NABL accredited laboratory before supply and the date of calibration shall not be older than two months from the date of supply of the kit.	
28	Training	Supplier shall have to ensure that the kit is made user friendly. Apart from detailed demonstration at site, the supplier shall also have to arrange necessary training to end user engineers.	
29	After Sales Service	Bidder will have to submit the documentary evidence of having established mechanism in India for prompt services.	

Note: The bidder shall furnish **complete & specific information** against Sl. No**.(1) to (29).**The Bidder shall also furnish any other information's as in their opinion is needed to give full description and details to judge the item(s) offered by them **in addition to the above given parameters**. (Listing Sl.No.30, 31,……..etc.). **The GTP must be signed & sealed by the manufacturer/bidder.**

(28) Technical Specification For Insulation Resistance (IR) Tester (10KV)		
Sl No	**Parameters**	**Specifications**
1	Functional Requirement	For measurement & analysis of Insulation Resistance of various substation equipment
2	Voltage selection	500 V - 1 kV - 5 kV - 10 kV directly, one button selectable. 500 V to 10 kV in 25 V, 100 V or 500 V steps.
3	Test Voltage Accuracy	± 3% of nominal test voltages on 10GΩ
4	Measurement Range	Min 20TΩ to Max 40 TΩ with max resolution of 0.1TΩ
5	Short Circuit Current	Min 2mA
6	Step Voltage Test	500 V to 10 kV in 25 V, 100 V or 500 V steps.
7	Current Measurment	0.01 nA to 6 mA ±(10% of reading + 3 digits).
8	Capacitance Measurement	10 nF to 25 μF Accuracy ±(10% of reading + 3 digits).
9	AC & DC Voltage Measurement Range	40 V to 600 V ac/dc.
10	Test time	90 min (max continuous)
11	Modes Available	- Autoranginng of Resistance Value - Automated Polarization Index calculation - Automated Dielectric Absorption Ratio calculation - Programmable Pass-Fail test - Step Voltage test - Capacitance Measurement - Leakage Current Measurement - AC / DC Voltage Measurement - Output Voltage Measurement - Switchable filter to remove external noise interference
12	Data storage	1000 readings memory (minimum)
13	Display	LCD with backlit
14	Operating Temperature	5°C to 50°C
15	Environmental Protection Instrument	IP65 (IP40 - with lid open)
16	Standards	EN 61010-1 and 2, EN 61326-1, IEC 61000-4-3, IEC 1000-4-2, CAT-IV 600V, CE Marking
17	IP Protection	IP65 (with closed lid).
18	Weight	Should be portable and easy to carry.
19	Power supply	Mains and Battery Operated with Built-in rechargable battery pack Charger : 230V AC+/-10%, 50Hz +/- 3 %
20	Scope of supply	Instrument with 10m Test Lead Set, Power Supply cable, Calibration Certificate, Operation Manual, Software, Original Carrying Case.
21	Safety specifications	As per IEC 61010-1 specifications
22	Type Testing	The test kit shall be type tested for Environmental Tests, EMI-EMC & Safety Tests)as per relavent IEC Standardwith latest amendment

		at any accredited laboratory(accredited by NABL or recognised International accredition body). The type test report should be submitted alongwith the offer.
23	Calibration certificate	Unit shall be duly calibrated at NABL accredited lab before supply and the date of calibration shall not be older than two months from the date of inspection/supply of the kit.
24	Warranty / Guarantee	18 months form the date of delivery or 12 months form the date of successful & complete commissioning at end user sites, whichever is earlier. If the kit needs to be shifted to supplier's works for repairs within warranty/guaranty period, suppliers will have to bear the cost of repairs, spares and transportation of kit for repair at service center/works.
25	Training	Supplier shall have to ensure that the kit is made user friendly. Apart from detailed demonstration at site, the supplier shall also have to arrange necessary training to end user engineers
26	After Sales Service	Bidder will have to submit the documentary evidence of having established mechanism in India for prompt services.

(28) Guaranteed Technical Particular For Insulation Resistance (IR) Tester (10KV)

GTP must be furnished in the following format only and in full.

Sl No	Parameters	Specifications	Bidder's particulars
1	Name & address of manufacturer		
2	Type/model details of offered equipment		
3	Applicable Indian/International standard		
4	Functional Requirement	For measurement & analysis of Insulation Resistance of various substation equipment	
5	Voltage selection		
6	Test Voltage Accuracy		
7	Measurement Range		
8	Short Circuit Current		
9	Step Voltage Test		
10	Leakage Current Measurment		
11	Capacitance Measurement		
12	AC & DC Voltage Measurement Range	In Voltage	

13	Test time (max continuous)	In min	
14	Modes Available	- Autoranginng of Resistance Value - Automated Polarization Index calculation - Automated Dielectric Absorption Ratio calculation - Programmable Pass-Fail test - Step Voltage test - Capacitance Measurement - Leakage Current Measurement - AC / DC Voltage Measurement - Output Voltage Measurement - Switchable filter to remove external noise interference	
15	Data storage	No of readings that can be stored in instrument.	
16	Display	LCD with backlit(Yes/No)	
17	Operating Temperature	In °C	
18	Environmental Protection Instrument	IP65 (IP40 - with lid open) (Yes/No)	
19	Standards	Mention all	
20	IP Protection	IP65 (with closed lid). (Yes/No)	
21	Dimensions (in mm)	Mention size	
22	Weight of the kit	In KG	
23	Power supply		
24	Scope of supply	Instrument with 10m Test Lead Set, Power Supply cable, Calibration Certificate, Operation Manual, Software, Original Carrying case.	
25	Safety specifications	As per IEC 61010-1 specifications	
26	Type Testing	The test kit shall be type tested for Environmental Tests, EMI-EMC & Safety Tests)as per relavent IEC Standardwith latest amendment at any accredited laboratory(accredited by NABL or recognised International accredition body). The type test report should be submitted alongwith the offer.	
27	Calibration certificate	Unit shall be duly calibrated at NABL accredited laboratory before supply	

		and the date of calibration shall not be older than two months from the date of supply of the kit.	
28	Warranty / Guarantee	18 months form the date of delivery or 12 months form the date of successful & complete commissioning at end user sites, whichever is earlier. If the kit needs to be shifted to supplier's works for repairs within warranty/guaranty period, suppliers will have to bear the cost of repairs, spares and transportation of kit for repair at service center/works.	
29	Training	Supplier shall have to ensure that the kit is made user friendly. Apart from detailed demonstration at site, the supplier shall also have to arrange necessary training to end user engineers	
30	After Sales Service	Bidder will have to submit the documentary evidence of having established mechanism in India for prompt services.	

Note: The bidder shall furnish **complete & specific information** against Sl. No.(1) to (30).The Bidder shall also furnish any other information as in their opinion is needed to give full description and details to judge the item(s) offered by them **in addition to the above given parameters**.(Listing Sl.No.31, 32,……..etc)

(29) Technical Specification For Automatic Capacitance & Tan Delta Measuring Kit		
Sl No	**Parameters**	**Specifications**
1	Functional Requirement	The instrument shall be suitable for automatic offline measurement of Capacitance & Tan Delta of switchyard equipment as per the test plan by auto-balancing No need of manual balancing. The equipment shall also be capable of measuring Insulation Power Factor, Excitation Current of transformer/reactors, Watt Loss, Capacitance, Inductance, Voltage and Current of EHV Class transformer (1/2/3 windings), Bus and Line CVT, CT, LA, Bushings, Long HV Cables, Capacitors, Reactors etc at 132/220/400 KV live switchyard environment. The set shall be capable of measuring Power Factor, C & Tan Delta (DF) of each winding of transformers and bushings using different test circuits in UST,GST-G and GST modes without changing connection.
2	Requirements	Indication of Leakage current
		Suitable for extraneous conditions in 400KV switchyard under heavy induction
		Automatic Interference Suppression.
		High quality design & easy availability of spares.
3	Display	Large colour backlit LCD high resolution graphical display on laptop / Front Panel. Graphical representation of Voltage vs Tan Delta to know the Tan delta gradient & data analysis for comparison with old results and manufacturer's data. If the kit is being controlled through inbuilt LCD monitor and kit is having data storage facility, then there is no need to supply laptop.The software should be suitable for automatic testing & report generation and trend analysis.The kit should have facility to store and communicate with windows based computer for exporting the test data.
4	Laptop Specs	Laptop of PC of Dell/Lenovo/HP make with minmum specs such as 500GB HDD, 4 GB RAM, Windows 8, 64 Bit, Core i3, USB - 2 Nos, Ethernet, 15" TFT Screen , antivirus software complete with required cables and connectionswith preloaded operating MS Window 7/8 or better with latest version with applicable software required for storage, analysis and record management.
5	Temperature Correction	Built in Intelligent Temperature correction facility to yield the test result at corrected temperature as per IEC for Tan delta
6	Test	Executes all the test modes automatically
7	Voltage Setting	Fully Automatic through software
8	Analysis Software	Windows based analysis software for Tan delta Vs Time, Tan delta Vs Voltage
9	Protections & Safety Features	1. Short Circuit Protection 1.Open Ground Protection 2. Zero Start Protection 3. HV interlock 4. Over Voltage Protection 5. Over Current Protection 6. Over Temperature Protection.
10	Input Power	230V ± 10% Single Phae AC or better at 50±5% Hz

11	Output Power	3.5 KVA
12	Output Voltage	0 to 12KV, continuously adjustable
13	Output Current	0 - 100 mA (Min) continuous at 12KV, 300 mA (Min) intermittently.
14	Test Frequency	45 to 70Hz at 12 KV and 20 to 400Hz or better at 4 KV output voltage (independent of input signal). Resolution: 0.1Hz ,Accuracy 1% of Reading.
15	Measurement Parameters	
16	Capacitance	Range : 10 pF to 1µF or better Resolution : 0.01pF or better. Accuracy : ±0.5% of the reading ±1pF
17	Inductance	6 H to 1MH or better Resolution: 0.1mH maximum. Accuracy: ±0.5% of the *reading*
18	Tan Delta(DF)	Range : 0-1(0- 1000%) Resolution : 0.01% Accuracy : ±0.5% of the reading ± 0.05% .
19	Voltage Measurement	Range : up to 12 KV Resolution : 1 V Accuracy : ±1% of reading
20	Current Measurement	Range : 0 - 5 Amps Resolution : 0.1µA Accuracy : ±1 % of reading
21	Power Factor	Range : 0 to 100% (0-1) Resolution : 0.01% Accuracy : ±0.5% of the reading ±0.05%
22	Watt Loss	0 to 2 KW actual power, 0 to 100KW when connected to 10KV equivalent. 0.1 mW maximum resolution. Accuracy: 1% of reading
23	Temperature Measurement	Range: 5 Deg C to 50 Deg C Resolution: 0.1 Deg C
	Cooling arrangement	Necessary inbuilt cooling arrangement should be provided to dissipiate the heat generated during testing.No external coolant /accessory shall be required.
24	Temperature correction	Automatic corrected at 20 Deg C.
25	Safety features	The test kit shall be compatible for EMI/EMC safety environment requirement asper IEC.
26	Essential Accessories	1. Calibrator Box with one C & three Tan Delta Taps, Test Voltage 2KVAC 2. One complete set of cables including HV, LV and Ground cables of sufficient length (Min 20Meter) with suitable clampsand connectors compatible with the instrument should be provided.. 4. Original Carrying Cases: Foam Padded Carrying Cases for Bridge & Power supply, Carry Bag for Cables 5. Laptop with accessories 6. Operational Manual CD 8. Calibration certificate

27	Weight	It should be easily portable and trolley mounted for smooth movement in the switchyard
28	Operating Temp	0 to +50 deg C
29	Type Testing	The test kit shall be type tested for Environmental Tests, EMI-EMC & Safety Tests as per relavent IEC Standard with latest amendment at any accredited laboratory(accredited by NABL or recognized International accreditation body). The type test report should be submitted along with the offer.
30	Warranty / Guarantee	18 months form the date of delivery or 12 months form the date of successful & complete commissioning at End User Sites, whichever is earlier.
		All the materials, including accessories, cables, laptops (wherever supplied) etc. are to be covered under warranty/ guarantee period. If the kit needs to be shifted to supplier's works for repairs within warranty/guaranty period, suppliers will have to bear the cost of repairs, spares and transportation of kit for repair at service center/works.
31	Calibration certificate	Unit shall be duly calibrated at NABL accredited laboratory before supply and the date of calibration shall not be older than two months from the date of supply of the kit.
32	Training	Supplier shall have to ensure that the kit is made user friendly. Apart from detailed demonstration at site, the supplier shall also have to arrange necessary training to End User engineers.
33	Commissioning, Handing over the Instrument	Successful bidder will have to commission the instrument to the satisfaction of End User.
34	After Sales Service	Bidder will have to submit the documentary evidence of having established mechanism in India for prompt services.

(4) Guaranteed Technical Particulars for Automatic Capacitance & Tan Delta Measuring Kit

GTP must be furnished only in the following format and in full.

Sl No	Parameters	Bidder's Particulars
1	Manufacturer's Name and Address	
2	Type/Model details of offered Equipment	
3	Applicable Indian/International Standards for the offered equipment	
4	Functional Requirement	
5	AC Input Power Supply:Volts and Hz	
	Output voltage(KV)	
6	Output Power (KVA)	
7	Output current (mA) continuous and maximum	
8	Measurement: Frequency Range	

8.1	Test Frequency Range	
8.2	Resolution (hz)	
8.3	Accuracy(% of Reading)	
9	Measurement: Voltage	
9.1	Test Voltage (Range)	
9.2	Resolution (V)	
9.3	Accuracy (% of Reading)	
10	Measurement: Current	
10.1	Test Current (Range)	
10.2	Resolution (micro-Amp)	
10.3	Accuracy (% of Reading)	
11	Measurement: Capacitance	
11.1	Capacitance (Range at 12KV)	
11.2	Resolution (pF)	
11.3	Accuracy (% of Reading)	
12	Measurement: Inductance	
12.1	Inductance (Range H/MH)	
12.2	Resolution (mH)	
12.3	Accuracy (% of Reading)	
13	Measurement:Power Factor	
13.1	PF Range	
13.2	Resolution (%)	
13.3	Accuracy (% of Reading)	
14	Measurement: Dissipiation Factor	
14.1	DF Range	
14.2	Resolution (%)	
14.3	Accuracy (% of Reading)	
15	Watt Loss Range (KW)	
15.1	Resolution (mW)	
15.2	Accuracy (% of Reading)	
16	Temperature Measurement:	
16.1	Range: (Degree C)	
16.2	Resolution	
17	Environmental	
17.1	Temperature	
17.2	Operating (Degree C)	
17.3	Storage (Degree C)	
17.4	Humidity (%)	
18	Noise Immunity(Dynamic Noise suppression)	
18.1	Electrostatic	
18.2	Electromagnetic	

19	Computer Interface (Model,OS,Ethernet/USB etc)	
20	Standards	
	Applicable Standards:	
21	Built in Temperature Correction facility	
22	High Voltage Screened cable length (Mtr)	
23	Type of Enclosure Protection	
24	Capable Test Modes (without changing connection)	
25	Accessories	
26	Protections & Safety Features	
27	Weight	
28	Dimension	
29	Display	
30	Documentary Evidence and address of the Service Centre in India.	
31	Type Testing	
32	Warranty/Guarantee	
33	After Sales Service	

Note: The bidder shall furnish **complete & specific information** against Sl. No**.(1)** to **(30**).The Bidder may also furnish any other information as in their opinion is needed to give full description and details to judge the item(s) offered by them **in addition to the above given parameters**. (Listing Sl.No.31,32,……..etc). The GTP must be signed and sealed by the manufacturer/bidder.

(30) Technical Specification for Break Down Voltage(BDV) Test Kit of Oil 100KV		
Sl No	**Parameters**	**Specifications**
1	Functional Requirement	Automatic Oil Break Down Voltage Test Kit suitable for testing of Transformer Oil as per IEC 156, IS 6792, ASTM D877, ASTM D1816, UNE 21, Withstand A, Withstand B, 5 Min Test & Custom Mode.
2	Voltage Range	0 to 100 KV AC
3	Trip Current	10mA or less
4	Indication	3½ Digit Panel Meter colour display with back light.
5	Resolution	100V in Manual Mode & 400V in Auto Mode
6	Accuracy	+/-1%, ± 2 digits or better
7	Control	Auto/Manual Mode
8	HT on & OFF	Kit Should have separate switches for HT on & OFF
9	BDV hold facility	Kit should have BDV hold facility with reset switch
10	Safety lock	It should have Safety interlock on cover
11	Protection circuits	It should have protection against overloads & short circuits
12	The instrument should have Option to set	Stand time : Selectable Stir time : Selectable
13	Temperature Sensor	The kit should have inbuilt Temperature Sensor to detect oil temperature automatically
14	Rate of rise of volts	In the range of 0.5 KV to 5KV adjustable
15	Safety	Safety interlock on high voltage test chamber
		Open Ground & interlock indication & protection on front panel
		It should have facility for Time & Dated result print or download via USB interface with 100 test result memory
		Should have built-in-printer
		Should have option for Quick test selection through Keypad
16	Required accessories	Oil test vessels with lid - 1 no Spherical electrodes fitted to test set - 1 Pair Mushroom Type Electrode - 1 Pair Cylindrical electrodes - 1 Pair Plate Type Electrode - 1 Pair Padded transport case - 1 No Users/instruction manual - 1 No
17	Power Supply	230V AC+/-10%, 50Hz +/- 3 % 230V /110VAC
18	Type Testing	The test kit shall be type tested for Environmental Tests, EMI-EMC & Safety Tests as per relavent IEC Standardwith latest amendment at any accredited laboratory(accredited by NABL or recognised International accredition body). The type test report should be submitted alongwith the offer.
19	Warranty / Guarantee	18 months form the date of delivery or 12 months form the date of successful & complete commissioning at end user sites, whichever is earlier.

		All the materials, including accessories, cables, laptops (wherever supplied) etc. are to be covered under warranty/ guarantee period. If the kit needs to be shifted to supplier's works for repairs within warranty/guaranty period, suppliers will have to bear the cost of repairs, spares and transportation of kit for repair at service center/works.
20	Calibration certificate	Unit shall be duly calibrated at NABL accredited laboratory before supply and the date of calibration shall not be older than two months from the date of supply of the kit.
21	Training	Supplier shall have to ensure that the kit is made user friendly. Apart from detailed demonstration at site, the supplier shall also have to arrange necessary training to end user engineers.
22	Commissioning, Handing over the Instrument	Successful bidder will have to commission the instrument to the satisfaction of end user.
23	After Sales Service	Bidder will have to submit the documentary evidence of having established mechanism in India for prompt services.

(30) Guaranteed Technical Particular for Break Down Voltage (BDV)Test Kit of Oil (100KV)

The GTP must be furnished only in the following format and in full.

Sl No	Parameters	Specifications	Bidder's particulars
A	Name and Address of the manufacturer		
B	Type and model of the equipment		
C	Applicable Indian/International Standards for the offered equipment		
1	Functional Requirement	Automatic Oil Break Down Voltage Test Kit suitable for testing of Transformer Oil as per IEC 156, IS 6792, ASTM D877, ASTM D1816, UNE 21, Withstand A, Withstand B, 5 Min Test & Custom Mode.	
2	Voltage Range	0 to 100 KV AC	
3	Trip Current	10mA or less	
4	Indication	3½ Digit Panel Meter color display	
5	Resolution	100V in Manual Mode & 400V in Auto Mode	
6	Accuracy	+/-1% , ± 2 digits or better	
7	Control	Auto/Manual Mode	
8	HT on & OFF	Kit Should have separate switches for HT ON & OFF. HV switch-off time should be less than 10 µsec.	
9	BDV hold facility	Kit should have BDV hold facility with reset switch	

10	Safety lock	It should have Safety interlock on cover. The Electrode should have lockable adjustment.	
11	Protection circuits	It should have protection against overloads & short circuits	
12	The instrument should have Option to set	Stand time : Selectable Stir time : Selectable	
13	Temperature Sensor	The kit should have inbuilt Temperature Sensor to detect oil temperature automatically	
14	Rate of rise of volts	In the range of 0.5 KV to 5KV adjustable	
15	Safety	Safety interlock on high voltage test chamber	
		Open Ground & interlock indication & protection on front panel	
		It should have facility for Time & Dated result print or download via USB interface with 100 test result memory	
		Should have built-in-printer	
		Should have option for Quick test selection through Keypad	
16	Required accessories	Oil test vessels with lid - 1 no Spherical electrodes fitted to test set - 1 Pair Mushroom Type Electrode - 1 Pair Cylindrical electrodes - 1 Pair Plate Type Electrode - 1 Pair Padded transport case - 1 no Users/instruction manual - 1 no	
17	Power Supply	230V AC+/-10%, 50Hz +/- 3 %	
18	Type Testing	The test kit shall be type tested for Environmental Tests, EMI-EMC&Safety Tests as per relavent IEC Standardwith latest amendment at any accredited laboratory(accredited by NABL or recognised International accredition body). The type test report should be submitted alongwith the offer.	
19	Warranty / Guarantee	18 months form the date of delivery or 12 months form the date of successful & complete commissioning at end user sites, whichever is earlier.	
		All the materials, including accessories, cables, laptops (wherever supplied) etc. are to be covered under warranty/ guarantee period. If the kit needs to be shifted to supplier's works for repairs within warranty/guaranty period, suppliers	

		will have to bear the cost of repairs, spares and transportation of kit for repair at service center/works.	
20	Calibration certificate	Unit shall be duly calibrated before supply and the date of calibration shall not be older than two months from the date of inspection/supply of the kit.	
21	Training	Supplier shall have to ensure that the kit is made user friendly. Apart from detailed demonstration at site, the supplier shall also have to arrange necessary training to end user engineers.	
22	Commissioning, Handing over the Instrument	Successful bidder will have to commission the instrument to the satisfaction of end user.	
23	After Sales Service	Bidder will have to submit the documentary evidence of having established mechanism in India for prompt services.	

Note: The bidder shall furnish **complete & specific information** against Sl. No.(1) to (23).The Bidder may also furnish any other information as in their opinion is needed to give full description and details to judge the item(s) offered by them **in addition to the above given parameters**.(Listing Sl.No. 24, 25,….. etc.).
The GTP must be signed and sealed by the manufacturer/bidder.

(31) Technical Specification For Frequency Response Analyser (FRA) test set		
Sl No	**Parameters**	**Specifications**
1	Functional Requirement	The instrument shall be able to detect and identification of dielectric and mechanical failures in large power transformers in up to 400KV charged switchyard area preceded by mechanical changes in the core-winding structure due to transportation damage, short circuit forces, natural effects of aging on the insulating structuresetc.The testing method should be based on Sweep frequency Response Analysis of comlex R-L-C network. The test instrument shall be designed and supplied completewith accessories, cables, connectors leads etc. alongwith requiredlicensed software for proper analysis andstorage of test data.
	Measurement	
2	Test method	Sweep frequency (SFRA)
3	Power supply	230 ± 10% VAC, 50±5% Hz with variations in voltage and frequency respectively.
5	Frequency range	1 Hz to 25 MHz , user selectable
6	Frequency resolution	≤0.01%
7	Measuring points	1600 minimum
8	Dynamic range	>110 dB
9	Accuracy Range	±1 dB (down to -100 dB)
	Analog Output	
10	No.of channels	1
11	Output impedance	50 Ω± 2%
12	Output voltage	0.1 Vpp to 10 Vpp (at 50 Ohms)
13	Frequency Range	1 Hz…25 MHz
14	Wave form	Sinusoidal signal
15	Sweep direction	Low to high or high to low.
16	Protection	Against Short circuit and Overload.
	Analog input	
17	No.of channels	2
19	Sampling	Simultaneously
20	Input Impedance	50 Ω± 2%
21	Environmental Conditions	0 to +55 ºC, 95% RH, non-condensing
22	Test Leads	One set of coaxial or equivalent (Min 30 M length) with suitableclamps and connectors compatible with the test instrument.
23	Standards	IEC/EN 60068-2-27, IEC/EN 60068-2-6, IEC 61326-1, IEC 61010-1
24	Control & display unit	The kit shall be controlled through built in industrial PC with touch screen/keyboard or externalLaptop PC of reputed brand with latest spec such as Duel CoreIntel processor, 4GB RAM, 500GB HDD, DVD Writer, 15 inch TFT/LCD screen or with better specs preloadedwith OS

		MS Window 7/8 or better with antivirus and licensed application software for the Test kit.
25	Software	Softwareof the kit should be Windows based, Menu driven and user friendly. It should have all the templates/features required for complete testing of transformer, reactors etc.and facility for comparision of past template of the tested unit.
26	Interface	USB, Ethernet
27	Plotting	Frequency VS Magnitude, Phase etc.
28	Scaling/Sweep mode	Log/Linear
29	Scope of Supply	Main Instrument, Licensed OS software& antivirus for PC Laptop Computer with carry bag, Test Lead Set of 30 Mtr, combination plugs, powersupply cables, Field Test Box, Original Carrying Case, operating manual (both soft and hard copy) and any other item as reqired for commissioning of theequipment.
30	Type Testing	The test kit shall be type tested for Environmental Tests, EMI-EMC (EN61326 2-1) & Safety Tests (EN 61010-1)as per relavent IEC Standard with latest amendment at any accredited laboratory(accredited by NABL or recognised International accredition body). The type test report should be submitted alongwith the offer.
31	Warranty / Guarantee	18 months form the date of delivery or 12 months form the date of successful & complete commissioning at end-user's sub-station, whichever is earlier.
		All the materials, including accessories, cables, laptops (wherever supplied) etc. are to be covered under warranty/ guarantee period. If the kit needs to be shifted to supplier's works for repairs within warranty/guaranty period, suppliers will have to bear the cost of repairs, spares and transportation of kit for repair at service center/works.
32	Calibration certificate	Unit shall be duly calibrated at NABL accredited laboratory before supply and the date of calibration shall not be older than two months from the date of supply of the kit.
33	Training	Supplier shall have to ensure that the kit is made user friendly. Apart from detailed demonstration at site, the supplier shall also have to arrange necessary training to end-user's engineers.
34	Commissioning, Handing over the Instrument	Successful bidder will have to commission the instrument to the satisfaction of end-user.
35	After Sales Service	Bidder will have to submit the documentary evidence of having established mechanism in India for prompt services.

(31) Guaranteed Technical Particulars For Frequency Response Analyser (FRA) test set

The GTP must be furnished only in the following format and in full.

Sl No	Parameters	Bidder's Particulars

1	Name and Address and country of manufacturer	
2	Type/Model details of offered equipment.	
3	Applicable Indian/International Standards for the offered equipment	
4	**Measurement**	
4.1	Test method	
4.2	Power supply voltage (v)	
4.3	Power supply frequency (Hz)	
4.4	Frequency range (Hz to MHz)	
4.5	Frequency Resolution	
4.6	Dynamic Range	
4.7	Accuracy Range (± dB)	
5	**Analog Output**	
5.1	Nos. of channels	
5.2	Output Voltage (V)	
5.3	Output Impedance(Ohms)	
5.4	Protection(Short Circuit)	
5.5	Frequency Range (Hz-MHz)	
5.6	Sweep direction	
5.7	Wave form	
6	**Analog Input**	
6.1	Nos of Channels	
6.2	Sampling	
6.3	Input Impedance	
7	**Data Collection**	
7.1	Test Method	
7.2	No.of Points (for accurate representation of frequency response curve.	
7.3	Display (Laptop computer spec)	
7.4	Memory (Internal)	
7.5	Interface (USB/Ethernet)	
7.6	Scaling(Linear/Log)	
7.7	Plotting	
8	Connector	
9	List of accessories	
10	Operating Temperature (Degree C)	
11	Operating Humidity	
12	Whether fully automated	

13	Waveform display	
14	Resistance to Transport shock and vibration.	
15	Analysis support	
16	Data storage format	
17	Data management	
18	Data Export (must be able to view data in simple spreadsheet applications	
19	Weight	
20	Documentary Evidence and address of the Service Centre in India.	
21	Type Testing	
22	After Sales Service	
23	Warranty / Guarantee	
24	Training	

Note: The bidder shall furnish **complete & specific information** against Sl. No.(1) to (24).The Bidder may also furnish any other information as in their opinion is needed to give full description and details to judge the item(s) offered by them **in addition to the above given parameters**. (Listing Sl.No.25,26,…….etc). The GTP must be signed and sealed by the manufacturer/bidder.

(32) Technical Specification For SF6 Gas Leakage Detector		
Sl No	**Parameters**	**Specifications**
1	Applications	The instrument should be locating and quantifying leakages of SF6-filled equipment
2	Functional Requirement	A shoulder belt facilities mobile and ergonomic working. The SF6 concentration is indicated in ppmV as well as by an audible signal.
3	Principle	Non-dispersive Infrared Spectrometer (NDIR) technology.
4	Sensor Sensitivity	1 ppmv No cross sensitivities to other gases Moisture: unaffected from 0-100% relative humidity (noncondensing)
5	Range	0 - 1,000 ppmv
6	Accuracy	< 50 ppm: +/- 4 %, 50 to 100 ppm: +/-5 %, 100 to 1000 ppm: +/- 2%
7	Response time T90	1 sec
8	Repeatability	< 0.3 %
9	Moisture	Unaffected in a range from 0- 100% RH, non-condensing.
10	Alarm	Audio and visual.
11	Power supply	Rechargeable battery with minimum 10 hours capacity.
12	Operating temperature	0 to + 50 Deg C
13	Special Features	1) It should detect small SF6 gas concentrations down to 1 ppmv 2) It should detect SF6 only - Unaffected by other gases - Unaffected by moisture - Unaffected by wind 3) It should have easy operation & Fast Response Time
14	Required Accesories	The main instrument will be supplied with Lithium ion batteries, Battery Charger,Carrying case, Calibration Certificate & Operational Manual
15	Type Test	The test kit shall be type tested for Environmental Tests, EMI-EMC & Safety Tests as per relavent IEC Standardwith latest amendment at any accredited laboratory(accredited by NABL or recognised International accredition body). The type test report should be submitted alongwith the offer.
16	Calibration certificate	The equipment shall be duly calibrated in NABL accredited Lab before supply and the date of calibration shall not be older than two months from the date of inspection/supply of the kit.
17	Warranty / Guarantee	18 months form the date of delivery or 12 months form the date of successful & complete commissioning at end user sites, whichever is earlier. All the materials, including accessories, cables, laptops (wherever supplied) etc. are to be covered under warranty/ guarantee period If the equipment t needs to be shifted to supplier's works for repairs within warranty/guaranty period, suppliers will have to bear the cost of repairs, spares and transportation of kit for repair at service center/works.
18	Training	Supplier shall have to ensure that the kit is made user friendly. Apart from detailed demonstration at site, the supplier shall also have to arrange necessary training to end user engineers.

19	Commissioning, Handing over the Instrument	Successful bidder will have to commission the instrument to the satisfaction of end-user.
20	After Sales Service	Bidder will have to submit the documentary evidence of having established mechanism in India for prompt services.

(32) Guaranteed Technical Particulars For SF6 Gas Leakage Detector

The GTP must be furnished in the following format only and in full

Sl No	Parameters	Specifications	Bidder's particulars
A	Manufacturer's Name and Address		
B	Type/Model details of offered Equipment		
C	Applicable Indian/International Standards for the offered equipment		
1	Applications	Leak path identification in SF6-filled equipment	
2	Functional Requirement	A shoulder belt facilities mobile and ergonomic working. The SF6 concentration is indicated in ppmV as well as by an audible signal.	
3	Principle	Non-dispersive Infrared Spectrometer (NDIR)	
4	Sensor Sensitivity	In ppmv	
		No cross sensitivities to other gases	
		Moisture: unaffected from 0-100% relative humidity(non-condensating)	
5	Range	In ppmv	
6	Accuracy		
7	Response time T90	In sec	
8	Repeatability		
9	Alarm	Audio and visual. (Yes/No)	
10	Power supply	Battery operated (Yes/No)	
		Rechargeable (Yes/No)	
		Battery capacity in Hours	
11	Operating temperature	In degree centigrade	
12	Special Features	1) It should detects small SF6 gas concentrations down	

		to 1 ppmv 2) It should detect SF6 only - Unaffected by other gases - Unaffected by moisture - Unaffected by wind 3) Easy operation & Fast Response Time	
13	Scope of supply	The main instrument should consist of : Lithium ion batteries, Carrying case, Hand Gun sensor & Operational Manual	
14	After sale service	Bidder will have to submit the documentary evidence of having established mechanism in India for prompt services.	

Note: The bidder shall furnish **complete & specific information** against Sl. No.(1) to (14).The Bidder shall also furnish any other information as in their opinion is needed to give full description and details to judge the item(s) offered by them **in addition to the above given parameters**. (Listing Sl.No.15, 16,……..etc)

(33) Technical Specification For Dew Point Measuring Instrument		
Sl No	**Parameters**	**Specifications**
1	Functional Requirement	The Instrument should be suitable for measurement of Dew Point of SF6 gas
2	Measurement Parameters	Dew Point in Atmospheric Pressure Absolute & Relative Humidity Temperature of the sample Moisture Content
3	Sensor principle	Dry Cap/Hydrocap Capacitive Thin Film Polymer
3	Dew Point Range	-70 degC to +20 degC
4	Measurement Accuracy	± 2°C.
5	Temp Measurement Range	-40 °C to +100°C (optional) or external
6	Relative Humidity Range	0.001 to 99.99%
7	Moisture Range	10 to 40,000 PPM
8	Dew Point Resolution	0.1°C
9	Response Time	10 Secs for 63% step change
10	Moisture Resolution	1PPM
11	Maximum Sample Temp	90°C (optional)
12	Maximum Pressure	10KG/sq.cm
13	Power supply	Li-ion Rechargeable battery pack with AC- Power or 100-240 V/50-60 Hz
14	Charger	Suitable for Rechargable Li-ion battery (optional)
15	Typical Run Time	70 hrs. (optional)
16	Display	LCD with Backlight / LED
17	Weight	Should be light weight and easily portable.
18	Degree of Protection	IP65
19	Accessories	The instrument shall be supplied with all the necessary accessories required for successful commissioning at MePTCL's site.
20	Instruction manual	Both hardcopy and soft copy
21	Type Test	The test kit shall be type tested for Environmental Tests, EMI-EMC & Safety Tests as per relavent IEC Standardwith latest amendment at any accredited laboratory (accredited by NABL or recognised International accredition body). The type test report should be submitted alongwith the offer.
22	Calibration certificate	The equipment shall be duly calibrated in NABL accredited Lab before supply and the date of calibration shall not be older than two months from the date of inspection/supply of the kit.
23	Warranty / Guarantee	18 months form the date of delivery or 12 months form the date of successful & complete commissioning at end user sites, whichever is

		earlier. All the materials, including accessories, cables, laptops (wherever supplied) etc. are to be covered under warranty/ guarantee period If the equipment needs to be shifted to supplier's works for repairs within warranty/guaranty period, suppliers will have to bear the cost of repairs, spares and transportation of kit for repair at service center/works.
24	Training	Supplier shall have to ensure that the kit is made user friendly. Apart from detailed demonstration at site, the supplier shall also have to arrange necessary training to end user engineers.
25	Commissioning, Handing over the Instrument	Successful bidder will have to commission the instrument to the satisfaction of end-user.
26	After Sales Service	Bidder will have to submit the documentary evidence of having established mechanism in India for prompt services.

(11) Guaranteed Technical Particular For Dew Point Measuring Instrument

The GTP must be furnished in the following format only and in full

Sl No	Parameters	Specifications	Bidder'a particulars
A	Manufacturer's Name and Address		
B	Type/Model details of offered Equipment		
C	Applicable Indian/International Standards for the offered equipment		
1	Functional Requirement	The Instrument should be suitable for measurement of Dew Point of SF6 gas	
2	Measurement Parameters	Dew Point in Atmospheric Pressure Absolute & Relative Humidity Temperature of the sample Moisture Content	
3	Dew Point Range	-70 deg C to +20 degC	
4	Measurement Accuracy	± 2°C.	
5	Temp Measurement Range	40 °C to +100°C (optional) / external	
6	Relative Humidity Range	0.001 to 99.99%	
7	Moisture Range	10 to 40,000PPM	
8	Dew Point Resolution	0.1°C	

9	Response Time	10 Secs for 63% step change	
10	Moisture Resolution	1PPM	
11	Maximum Sample Temp	90°C (optional)	
12	Maximum Pressure	10KG/sq.cm	
13	Power supply	Li-ion Rechargeable battery pack with AC- Power or 100-240 V/50-60 Hz	
14	Charger	Suitable for Rechargable Li-ion battery (optional)	
15	Typical Run Time	70 hrs. (optional)	
16	Display	LCD with Backlight / LED	
17	Weight	Should be light weight and easily portable.	
18	Degree of Protection	IP65	
19	Accessories	The instrument shall be supplied with all the necessary accessories required for successful commissioning at AEGCL's site.	
20	Instruction manual	Both hardcopy and soft copy	
21	Type Test	The test kit shall be type tested for Environmental Tests, EMI-EMC & Safety Tests as per relavent IEC Standardwith latest amendment at any accredited laboratory(accredited by NABL or recognised International accredition body). The type test report should be submitted alongwith the offer.	
22	Calibration certificate	The equipment shall be duly calibrated in NABL accredited Lab before supply and the date of calibration shall not be older than two months from the date of inspection/supply of the kit.	
23	Warranty / Guarantee	18 months form the date of delivery or 12 months form the date of successful & complete commissioning at end user sites, whichever is earlier. All the materials, including accessories, cables, laptops (wherever supplied) etc. are to be covered under warranty/ guarantee period If the equipment t needs to be shifted to supplier's works for repairs within warranty/guaranty period, suppliers will have to bear the cost of repairs, spares	

		and transportation of kit for repair at service center/works.	
24	Training	Supplier shall have to ensure that the kit is made user friendly. Apart from detailed demonstration at site, the supplier shall also have to arrange necessary training to end user engineers.	
25	Commissioning, Handing over the Instrument	Successful bidder will have to commission the instrument to the satisfaction of end-user.	
26	After Sales Service	Bidder will have to submit the documentary evidence of having established mechanism in India for prompt services.	

Note: The bidder shall furnish **complete and specific** information against Sl. No.(1) to (26).The Bidder shall also furnish any other information as in their opinion is needed to give full description and details to judge the item(s) offered by them **in addition to the above given parameters**. (Listing Sl.No.24, 25,……..etc)

(34) Technical Specification For Thermo Vision Camera		
Sl No	**Parameters**	**Specifications**
1	Functional Requirement	Thermo Vision Camera for detection of hot spots of EHV Sub-station and Transmission / Overhead Lines, should be capable of working satisfactorily in environment up to 400KV live switchyard.
2	Detector type	Uncooled FPA
3	IR resolution	320 X 240 pixels
4	Thermal Sensitivity (NETD)	≤0.03°C at +30°C target temp.
5	Spectral range	8 to 14µm
6	Lens	Tiltable Infrared lens
7	Min focus distance/FOV	40 cm /24° x 18°
8	IFOV(Spatial Resolution)	1.2mrad
9	Display Size & Type	3.5" Colour Touchscreen VGA LCD with backlight
10	Visual Camera	3.1 mega pixel (Min)
11	Frequency / Refresh Rate	50Hz/60Hz
12	Focus	Maual /Motor/ Auto
13	Digital Zoom	1 to 4X Continuous
14	Image Modes	Thermal image , visual images, P-I-P, thermal fusion
15	Temperature range	-20°C to 600°C
16	Temperature accuracy	±2°C or ± 2% of reading
17	Measurement correction	Auto/Manual
18	Spot Meter	4 adjustable spot
19	Area Profile	5 boxes with Max / Min & Avg Temp
20	Line Profile	Vertical / Horizontal
21	Isothermal anaylsis	Capture High/Low temparature/ Interval
22	Delta T	Yes
23	Emissivity correction	Selectable. 0.01 to 1.0 in steps of 0.01
24	Temp Alarm	Voice, Colour (High temp, Low temp and isotherm)
25	Colour Pallets	7 Nos (Min)
26	Image Adjustment	Contrast & Brightness
27	Settings	Language, Date, Time, Temp (C / F / K)
28	Background temp correction	Automatic
29	Atmospheric trans correction	Automatic
30	Storage Type	Built-in 4 GB flash memory, 4GB SD memory save to USB flash drive capability
31	Storage Capacity	Upto 700 images in built-in flash card Upto 5600 images in 256 MB SD Card
32	Storage Format	JPEG with Temperature Data (14 bit) or fully radiometric IS2

33	Periodic Image Storage	User defined 10s alteast
34	Voice Annotation	60 sec Recording / Replay per Image
35	Laser Pointer	Yes
36	USB	Yes for Image Transfer
37	Video O/P	Yes
38	Audio O/P	Yes
39	Tripod Mounting	1/4" – 20
40	AC operation	230 ± 10% VAC, 50±5% Hz, 1 Ph
41	Battery Type	Minimum 2 Rechargeable Li-Ion rechargable batteries.
42	Battery operating time	3 Hrs (Minimum) continuous use per battery pack.
43	Operating temperature, humidity	0°C to 50°C, 95% non-condensing
44	Interfaces	USB, Bluetooth, Video & Audio output
45	Weight	Should be light weight and handy.
46	Standards	IP 54, IEC 60068-2-29, IEC 60068-2-6
47	Laptop Specs	Min Specs will be as 500GB HDD, 4 GB Ram, Windows 8 64 Bit, Core i5, USB - 2 Nos, Ethernet, DVD Drive
48	Scope of supply	Camera with standard lens, Telephoto Lens (6° X 4°/ 4 m with IFOV <0.35mRad), 2 rechargable Battery, Battery Charger, Adaptor, USB Cable, SD Card (2 GB), SD Card reader (USB), Original Carrying Case, Tripod, Software CD, Laptop with Bag
49	Type Testing	The test kit shall be type tested for Environmental Tests, EMI-EMC & Safety Tests)as per relavent IEC Standardwith latest amendment at any accredited laboratory(accredited by NABL or recognised International accredition body). The type test report should be submitted alongwith the offer.
50	Warranty/ Guarantee	18 months form the date of delivery or 12 months form the date of successful & complete commissioning at end-user's sub-station, whichever is earlier. All the materials, including accessories, cables, laptops (wherever supplied) etc. are to be covered under warranty/ guarantee period. If the kit needs to be shifted to supplier's works for repairs within warranty/guaranty period, suppliers will have to bear the cost of repairs, spares and transportation of kit for repair at service center/works.
51	Calibration certificate	Unit shall be duly calibrated at NABL accredited laboratory before supply and the date of calibration shall not be older than two months from the date of supply of the kit.
52	Training	Supplier shall have to ensure that the kit is made user friendly. Apart from detailed demonstration at site, the supplier shall also have to arrange necessary training to end-user's engineers.
53	Commissioning, Handing over the Instrument	Successful bidder will have to commission the instrument to the satisfaction of end-user.
54	After sale service	Bidder will have to submit the documentary evidence of having established mechanism in India for prompt services.

(34) Guaranteed Technical Particular for Thermo Vision Camera

The GTP must be furnished in the following format only and in full

Sl No	Parameters	Specifications	Bidder's particulars

A	Manufacturer's Name and Address		
B	Type/Model details of offered Equipment		
C	Applicable Indian/International Standards for the offered equipment		
1	Functional Requirement	Thermo Vision Camera for detection of hot spots of EHV Sub-station and Transmission / Overhead Lines, should be capable of working satisfactorily in environment up to 400KV live switchyard.	
2	Detector type	Uncooled FPA	
3	IR resolution	320x240 pixels	
4	Thermal Sensitivity (NETD)	≤0.03°C at +30°C target temp.	
5	Spectral range	8 to 14µm	
6	Lens	Tiltable Infrared lens	
7	Min focus distance/FOV	40 cm /24° x 18°	
8	IFOV(Spatial Resolution)	1.2mrad	
9	Display Size & Type	3.5" Colour Touchscreen VGA LCD with backlight	
10	Visual Camera	3.1 Mega pixel(Min)	
11	Frequency / Refresh Rate	50Hz/60Hz	
12	Focus	Maual /Motor/ Auto	
13	Digital Zoom	1 to 4X Continuous	
14	Image Modes	Thermal image , visual images, P-I-P, thermal fusion	
15	Temperature range	-20°C to 600°C	
16	Temperature accuracy	±2°C or ± 2% of reading	
17	Measurement correction	Auto/Manual	
18	Spot Meter	4 adjustable spot	
19	Area Profile	5 boxes with Max / Min & Avg Temp	
20	Line Profile	Vertical / Horizontal	
21	Isothermal anaylsis	Capture High/Low temparature/ Interval	
22	Delta T	Yes	
23	Emissivity correction	Selectable. 0.01 to 1.0 in steps of 0.01	
24	Temp Alarm	Voice, Colour (High temp, Low temp and isotherm)	
25	Colour Pallets	7 Nos(Minimum)	
26	Image Adjustment	Contrast & Brightness	
27	Settings	Language, Date, Time, Temp (C / F / K)	
28	Background temp correction	Automatic	
29	Atmospheric trans correction	Automatic	
30	Storage Type	Built-in 4 GB flash memory, 4GB SD memory save to USB flash drive capability	
31	Storage Capacity	Upto 700 images in built-in flash card Upto 5600 images in 256 MB SD	

		Card	
32	Storage Format	JPEG with Temperature Data (14 bit) or or fully radiometric IS2	
33	Periodic Image Storage	User defined 10s alteast	
34	Voice Annotation	60 sec Recording / Replay per Image	
35	Laser Pointer	Yes	
36	USB	Yes for Image Transfer	
37	Video O/P	Yes/No	
38	Audio O/P	Yes/No	
39	Tripod Mounting	1/4" – 20	
40	AC Opertion	230 ± 10% VAC, 50±5% Hz, 1 Ph	
41	Battery Type	Minimum 2 Rechargeable Li-Ion rechargable batteries.	
42	Battery operating Time	3 Hrs (Minimum) continuous use per battery pack	
43	Operating temperature/humidity	0°C to 50°C and 95% non condensing	
44	Interfaces	USB, Bluetooth, Video & Audio output	
45	Weight(in Kg)		
46	Standards	IP 54, IEC 60068-2-29, IEC 60068-2-6	
47	Laptop Specs	Min Specs will be as 500GB HDD, 4 GB Ram, Windows 8 64 Bit, Core i5, USB - 2 Nos, Ethernet, DVD Drive	
48	Scope of supply	Camera with standard lens, Telephoto Lens (6° X 4°/ 4 m with IFOV < 0.35mRad), 2 rechargable Battery, Battery Charger, Adaptor, USB Cable, SD Card (2 GB), SD Card reader (USB), Original carrying Case, Tripod, Software CD, Laptop with Bag etc.	
49	After sale service	Bidder will have to submit the documentary evidence of having established mechanism in India for prompt services.	

Note: The bidder shall furnish **complete & specific information** against Sl. No.(1) to (49).The Bidder shall also furnish any other information as in their opinion is needed to give full description and details to judge the item(s) offered by them **in addition to the above given parameters**. (Listing Sl.No.50,51,……..etc)

(35) Technical Specification For Thermal Scanner (for Transformer/ Reactor)		
Sl No	**Parameters**	**Specifications**
1	Functional Requirement	Thermo Vision Camera for detection of hot spots of Transformer/ Reactor should be capable of working satisfactorily in environment up to 400KV live switchyard.
2	Detector type	Uncooled FPA
3	Detector Resolution	640x480 (307,200 pixels)
4	Thermal Sensitivity (NETD)	≤ 0.03 °C at +30°C
5	Spectral range	8 to 14µm
6	Lens	Tiltable Infrared lens
7	FOV / Min focus distance	25° HX 19°V / 40 cm (Standard Lens)
8	IFOV	1.2mRad or more
9	Display Size & Type	4" Colour Touchscreen VGA (640x480) LCD with backlight
9	Visual Camera	5 mega pixel (Min)
10	Frequency / Refresh Rate	50Hz/60Hz
11	Focus	Maual /Motor/ Auto
12	Digital Zoom	2x , 4x and 8x
13	Image Modes	Thermal image , visual images, P-I-P, thermal fusion
14	Temperature range	-20°C to +800°C
15	Temperature accuracy	±2°C or ± 2% of reading
16	Measurement correction	Auto/Manual
17	Spot Meter	5 adjustable spot
18	Area Profile	5 adjustable boxes with Max / Min & Avg Temp
19	Line Profile	Vertical / Horizontal
20	Isothermal anaylsis	Capture High/Low temparature/ Interval
21	Delta T	Yes
22	Emissivity correction	Selectable. 0.01 to 1.0 in steps of 0.01
23	Temp Alarm	Voice, Colour (High temp, Low temp and isotherm)
24	Colour Pallets	7 Nos(Min)
25	Image Adjustment	Contrast & Brightness
26	Settings	Language, Date, Time, Temp (C / F / K)
27	Background temp correction	Automatic
28	Atmospheric trans correction	Automatic
29	Storage Type	Built-in 4 GB flash memory, 4GB SD memory save to USB flash drive capability.
30	Storage Capacity	Upto 700 images in built-in flash card Upto 5600 images in 256 MB SD card
31	Storage Format	JPEG with Temperature Data (14 bit) or fully radiometric (is2)

32	Periodic Image Storage	User defined 10s alteast
33	Voice Annotation	60 sec recording / replay time per Image revieable playback on camera.
34	Laser Pointer	Yes
35	USB	Yes for Image Transfer
36	Video recording	Standard and radiometric.
37	Audio O/P	Yes
38	Tripod Mounting	1/4" – 20
39	AC Supply	230 ±10% VAC, 50±3% Hz 1Ph
40	Battery Type	Minimum 2 Rechargeable Li-Ion rechargable batteries.
41	Battery Operating Time	2 Hrs (Min) continuous use per battery pack
42	Operating temperature	0°C to 50°C
43	Interfaces	USB, Video & Audio output
44	Weight	Should be light weight and handy.
45	Standards	IP 54 or better , IEC,IEC 61010-1,IEC 61326-1
46	Laptop Specs	Min Specs will be as 500GB HDD, 4 GB Ram, Windows 8 64 Bit, Core i5, USB - 2 Nos, Ethernet, DVD Drive with analysing software and reporting software.
47	Scope of supply	Camera with standard lens, 2 rechargable Battery, Battery Charger, Adaptor, USB Cable, SD Card (8GB), SD Card reader (USB), original transport Case, Tripod, Software CD, Laptop with Bag etc.
48	Type Testing	The test kit shall be type tested for Environmental Tests, EMI-EMC & Safety Tests as per relavent IEC Standardwith latest amendment at any accredited laboratory(accredited by NABL or recognised International accredition body). The type test report should be submitted alongwith the offer.
49	Warranty / Guarantee	18 months form the date of delivery or 12 months form the date of successful & complete commissioning at end-user's sub-station, whichever is earlier. All the materials, including accessories, cables, laptops (wherever supplied) etc. are to be covered under warranty/ guarantee period. If the kit needs to be shifted to supplier's works for repairs within warranty/guaranty period, suppliers will have to bear the cost of repairs, spares and transportation of kit for repair at service center/works.
50	Calibration certificate	Unit shall be duly calibrated at NABL accredited laboratory before supply and the date of calibration shall not be older than two months from the date of supply of the kit.
51	Training	Supplier shall have to ensure that the kit is made user friendly. Apart from detailed demonstration at site, the supplier shall also have to arrange necessary training to end-user's engineers.
52	Commissioning, Handing over the Instrument	Successful bidder will have to commission the instrument to the satisfaction of end-user.
53	After sale service	Bidder will have to submit the documentary evidence of having established mechanism in India for prompt services.

(35) Guaranteed Technical Particular for Thermal Scanner (for Transformer/ Reactor) The GTP must be furnished in the following format only and in full			
Sl No	**Parameters**	**Specifications**	**Bidder's particulars**
A	Manufacturer's Name and Address		
B	Type/Model details of offered Equipment		
C	Applicable Indian/International Standards for the offered equipment		
1	Functional Requirement	Thermo Vision Camera for detection of hot spots of Transformer/ Reactor should be capable of working satisfactorily in environment up to 400KV live switchyard.	
2	Detector type	Uncooled FPA	
3	IR resolution	640x480 (307,200 pixels)	
4	Thermal Sensitivity (NETD)	≤ 0.03 °C at +30°C	
5	Spectral range	8 to 14µm	
6	Lens	Tiltable Infrared lens	
7	FOC / Min focus distance	25° HX 19°V / 40cm (Standard Lens)	
7	IFOV	1.2mRrad	
8	Display Size & Type	4" Colour touchscreen VGA (640x480) LCD with backlight	
9	Visual Camera	5 Mega pixel(Min)	
10	Frequency / Refresh Rate	50Hz/60Hz	
11	Focus	Maual /Motor/ Auto	
12	Digital Zoom	2x, 4x and 8x	
13	Image Modes	Thermal image , visual images, P-I-P, thermal fusion	
14	Temperature range	-20°C to 800°C	
15	Temperature accuracy	±2°C or ± 2% of reading	
16	Measurement correction	Auto/Manual	
17	Spot Meter	5 adjustable spot	
18	Area Profile	5 adjustable boxes with Max / Min & Avg Temp	
19	Line Profile	Vertical / Horizontal	
20	Isothermal anaylsis	Capture High/Low temparature/ Interval	
21	Delta T	Yes	

22	Emissivity correction	Selectable. 0.01 to 1.0 in steps of 0.01	
23	Alarm	Voice, Colour (High temp, Low temp and isotherm)	
24	Colour Pallets	7 Nos (Min)	
25	Image Adjustment	Contrast & Brightness	
26	Settings	Language, Date, Time, Temp (C / F / K)	
27	Background temp correction	Automatic	
28	Atmospheric trans correction	Automatic	
29	Storage Type	Built-in 4 GB flash memory, 4GB SD memory save to USB flash drive capability	
30	Storage Capacity	Upto 700 images in built-in flash card Upto 5600 images in 256 MB SD card	
31	Storage Format	JPEG with Temperature Data (14 bit) or radiometric (is2)	
32	Periodic Image Storage	User defined 10s alteast	
33	Voice Annotation	60sec recording / replay time per Image revieable playback on camera.	
34	Laser Pointer	Yes	
35	USB	Yes for Image Transfer	
36	Video O/P	Yes	
37	Audio O/P	Yes	
38	Tripod Mounting	1/4" - 20	
39	AC Supply	230 ± 10% VAC, 50±5% Hz	
40	Battery Type	Minimum 2 Rechargeable Li-Ion rechargable batteries.	
41	Battery Operating Time	2 Hrs (Min) continuous use per battery pack	
42	Operating temperature	0°C to 50°C	
43	Interfaces	USB, Video & Audio output	
44	Weight (in Kg)		
45	Standards	IP 54 or better, IEC,IEC 61010-1,IEC 61326-1	
46	Laptop Specs	Min Specs will be as 500GB HDD, 4 GB Ram, Windows 8 64 Bit, Core i5, USB - 2 Nos, Ethernet, DVD Drive with analysing software and reporting software.	
47	Scope of supply	Camera with standard lens, 2 rechargable Battery, Battery Charger, Adaptor, USB Cable, SD Card (8GB), SD Card reader	

		(USB), Original transport Case, Tripod, Software CD, Laptop with Bag etc.	
48	After sale service	Bidder will have to submit the documentary evidence of having established mechanism in India for prompt services.	

Note: The bidder shall furnish **complete & specific** information against Sl. No.(1) to (48).The Bidder shall also furnish any other information as in their opinion is needed to give full description and details to judge the item(s) offered by them **inaddition to the above given parameters**. (Listing Sl.No.49, 50,……..etc)

(36) TECHNICAL SPECIFICATION FOR TRANSMISSION LINE RESPONSE ANALYSER.

Technical Specification for Transmission Line Response Analyser		
Sl. No	**Parameters**	**Specifications**
1.	Functional Requirement	The instrument should be suitable to detect and locate the overhead line Fault (including high resistive faults) / inhomogeneous points etc. in offline mode, in multi circuit overhead transmission line up to 220 kV level, as per applicable standards / testing procedure.
		The test results should have repeatability, consistency & immunity to electromagnetic interference in live switchyard/adjacent transmission lines up to 220 kV levels in all-weather condition.
2.	Range of Operation	500 Km (min)
3.	Accuracy	100 M
4.	Measurement Mode	03-Phase
5.	Test Leads and accessories	One complete set of cables of sufficient length (min 20 metre) with suitable clamps & connectors, compatible with the instruments should be provided for successfully carrying out the test in MePTCL sub- station/transmission line. Additionally all the required accessories, drawing & documents, tools etc. should be provided for the smooth functioning of kit. Further hard carrying case (which should be robust/ rugged enough) for ensuring proper safety of the kit during transportation shall have to be provided.
6.	Design/Engg.	The entire equipment along with complete accessories must be designed / engineered by Original Equipment Manufacturer.
7.	Power Supply	It shall work on single phase 230 Volts ±10%, 50Hz ±5% supply with standard socket.
8.	Operating Temperature	-25 to +50?C
9.	Relative humidity	Max. 90% non-condensing
10.	Protection/ Control	Against short circuit, over voltage, improper ground connection over load & transient surges, the kit should have alarm/cut-off features to protect the instrument.
11.	Cooling Arrangement	Necessary in built cooling arrangement should be provided to dissipate the heat generated during testing. No external coolant/ accessory shall have to be required.
12.	Weight	It should be easily portable.
13.	Software	The software should be suitable for report generation and trend analysis. The kit should have facility to store and communicate with windows based computer for exporting the test data.
14.	Display	LCD

15.	Data	It shall include supply of one laptop PC of Dell/Lenovo/HP make with latest specifications such as Core i5 Intel Processor,4GB RAM, 320GB or better HDD, 15'' TFT screen, Combo 24xCD R/W Drive i.e having CD read / write facility complete with required cables and connectors with
16.	Storage/Analysis	preloaded operating MS Window 7 professional or better with latest version of application software required for storage analysis and record management.
17.	Environment	The test kit shall be compatible for EMI / EMC / safety environment requirement as per IEC.
18.	Type Testing	The test kit shall be type tested for Environmental Tests, EMI-EMC & Safety Tests as per relavent IEC Standard. The type test report form NABL accredited lab should be submitted alongwith the offer.
19.	Calibration certificate	Unit shall be duly calibrated before supply and the date of calibration shall not be older than two months from the date of delivery/supply of the kit to the consignee.
20.	Warranty/Guarantee	12months from the date of successful & complete commissioning at site
		All the materials, including accessories, cables, laptops (wherever supplied) etc. are to be covered under warranty/ guarantee period. If the kit needs to be shifted to supplier's works for repairs within warranty/guarantee period, suppliers will have to bear the cost of repairs, spares and transportation of kit
21.	Training	Supplier shall have to ensure that the kit is made user friendly. Apart from detailed demonstration at site, the supplier shall also have to arrange necessary training to MePTCL Engineers
22.	After Sales Service	Bidder will have to submit the documentary evidence of having established mechanism in India for prompt services.

(37) Technical Specification For CT-PT Analyser Kit		
Sl No	**Parameters**	**Specifications**
1	Functional Requirement	This Portable, Light-weight CT & PT Test Kit shall be a state of the art system for the testing of CTs and PTs. This should be able to test 3 or more taps of care of CT at a time and save the test results under the preassigned folder. The system should have should be operated through its in-built display or external laptop/PC . This instrument shall be user friendly and is able to work under hostile electrostatic conditions.
2	Should Test	Test M/P/TP type CT and PT
3	Knee Point check	up to 30000V
4	Aplicable IEC Standards	IEC60044-1, IEC60044-6
5	CT Measuring Parameters	Burden
		Winding resistance
		Excitation
		Polarity
		Ratio
6	PT Measuring Parameters	Ratio
		Polarity
		Winding resistance
		Burden
7	Output Voltage	0 to 120V (auto ranging)
8	Output Current	0 to 5A rms (15A peak)
9	Accuracy	±1%
10	Output Power	0.0001-500VA(1500 VA peak)
11	Ratio Measurement Range	30000:1 or 45000:5
12	Ratio Accuracy	0.001
13	Winding resistance meter	0 - 30 Ω
14	Resistance Accuracy	0.1%
15	Phase Displacement Resolution	1 Min
16	Display	In-built LCD display at least 8" as interface for window operating system
17	Mains Supply	110-240Vac/50Hz (nominal) 90-260Vac/45-55Hz (permissible)

18	Communication port	USB
19	Operation temperature	10 to 50° C
20	Relative Humidity	<90% RH(Non Condensing)
21	Portability	It should be easily portable for smooth movement. Carrying case with wheels & pulling handle should be provided.
22	Instrument Weight	Less than 19 kg.
23	Test Leads and accessories	Complete set of test leads, in-built Licensed software of the testing kit, power supply cables, original carrying case (which should be robust/ rugged enough for proper safety of the kit during transportation), manual (both in soft copy & hard copy) etc. required for carrying out all types of testing.
24	IP Protection	IP54 or better
25	Safety specifications	As per IEC specifications
26	Type Testing	The test kit shall be type tested for Environmental Tests, EMI-EMC & Safety Tests)as per relavent IEC Standardwith latest amendment at any accredited laboratory(accredited by NABL or recognised International accredition body). The type test report should be submitted alongwith the offer.
27	Calibration certificate	Unit shall be duly calibrated at NABL accredited laboratory before supply and the date of calibration shall not be older than two months from the date of supply of the kit.
28	Warranty / Guarantee	18 months form the date of delivery or 12 months form the date of successful & complete commissioning at end user sites, whichever is earlier. If the kit needs to be shifted to supplier's works for repairs within warranty/guaranty period, suppliers will have to bear the cost of repairs, spares and transportation of kit for repair at service center/works.
29	Training	Supplier shall have to ensure that the kit is made user friendly. Apart from detailed demonstration at site, the supplier shall also have to arrange necessary training to end user engineers
30	After Sales Service	Bidder will have to submit the documentary evidence of having established mechanism in India for prompt services.

(37) Guaranteed Technical Particular For CT-PT Analyser Kit

The GTP must be furnished in the following format only and in full.

Sl No	Parameters	Specifications	Bidder's particulars
1	Name & address of manufacturer		
2	Type/model details of offered equipment		

3	Applicable Indian/International standard		
4	Functional Requirement	This Portable, Light-weight CT & PT Test Kit shall be a state of the art system for the testing of CTs and PTs. This should be able to test 3 or more taps of care of CT at a time and save the test results under the preassigned folder. The system should have should be operated through its in-built display or external laptop/PC . This instrument shall be user friendly and is able to work under hostile electrostatic conditions.	
5	Should Test	Test M/P/TP type CT and PT	
6	Knee Point check	In voltage	
7	Applicable IS/IEC Standards	Mention all	
8	CT Measuring Parameters	Burden	
		Winding resistance	
		Excitation	
		Polarity	
		Ratio	
9	PT Measuring Parameters	Ratio	
		Polarity	
		Winding resistance	
10	Output Voltage	In Volts	
11	Output Current	In Ampere	
12	Accuracy	±1%	
13	Output Power	In VA	
14	Ratio Measurement Range		
15	Ratio Accuracy		
16	Winding resistance measurement range		
17	Resistance Accuracy		
18	Phase Displacement Resolution	In Minutes	
19	Display		
20	Mains Supply		

21	Communication port	USB (Yes/No)	
22	Operation temperature	In ° C	
23	Relative Humidity	In percentage	
24	Portability	It should be easily portable for smooth movement. Carrying case with wheels & pulling handle should be provided.	
25	Instrument Weight	In KG.	
26	Test Leads and accessories	Complete set of test leads, in-built Licensed software of the testing kit, power supply cables, original carrying case (which should be robust/ rugged enough for proper safety of the kit during transportation), manual (both in soft copy & hard copy) etc. required for carrying out all types of testing.	
27	Safety specifications	As per IEC specifications	
28	Type Testing	The test kit shall be type tested for Environmental Tests, EMI-EMC & Safety Tests)as per relavent IEC Standardwith latest amendment at any accredited laboratory(accredited by NABL or recognised International accredition body). The type test report should be submitted alongwith the offer.	
29	Calibration certificate	Unit shall be duly calibrated at NABL accredited laboratory before supply and the date of calibration shall not be older than two months from the date of supply of the kit.	
30	Warranty / Guarantee	18 months form the date of delivery or 12 months form the date of successful & complete commissioning at end user sites, whichever is earlier. If the kit needs to be shifted to supplier's works for repairs within warranty/guaranty period, suppliers will have to bear the cost of repairs, spares and transportation of kit for repair at service center/works.	
31	Training	Supplier shall have to ensure that the kit is made user friendly. Apart from detailed demonstration at site, the supplier shall also have to arrange	

		necessary training to end user engineers	
32	After Sales Service	Bidder will have to submit the documentary evidence of having established mechanism in India for prompt services.	

Note: The bidder shall furnish **complete & specific information** against Sl. No.(1) to (32).The Bidder shall also furnish any other information as in their opinion is needed to give full description and details to judge the item(s) offered by them**inaddition to the above given parameters**.(Listing 33, 34,…….etc)

(38) Technical Specification of HVAC Testing Instrument:-

Sl. No.	Specification	To be Filled by Bidders
1	The offered system shall be suitable for conducting High Voltage (HV) test at power frequency (50Hz) for condition assessment of HV power Equipment such as Power Cables, motors, generators, capacitors, switchgear, transformers, insulators and bushing etc. at site as per latest IEC/IEEE standards.	
2	The offered system shall be rugged, portable, compact and lightweight. All the accessories & integrated transport carrying case with wheels shall form the part of the offered equipment.	
3	The offered system shall be immune to electrical & magnetic interferences.	
4	All the units being offered by the vendor shall be compatible with each other wherever required. All the units of the comprehensive set being offered shall be of same make.	
5	The ranges and specifications mentioned in the specifications are the minimum required. Vendor offering equipment of higher ranges covering the range mentioned in the specifications shall be acceptable if other specifications are in order.	
6	Technical Specification: • Offered model should have voltage range 0-30KV RMS (continuously variable) • Offered model should have continuous rating of 1KVA at 30KV RMS • Instrument should have built in overcurrent protection • Input power supply – 230V AC, 50Hz • Short circuit rating of equipment – 50mA for 1 min. • LV and HV cable set of 5 metre each should be supplied with the instrument. • LV cable should be fitted with male type industrial power socket. • HV socket should be fitted with alligator clamps on end. • Discharge rod and Earthing cable of 10 metre should be provided	
7	Operating condition: Storage: -10 to +70 deg C Operating: 0 to +45 deg C Duty: Continuous, no thermal limitation for operating time	
8	Operating Temperature: -10 °C to +50 °C	
9	Installation and commissioning: Vendor shall also carry out the demonstration of the equipment at site as per the requirement of the MePTCL.	
10	Operating Manual: Vendor to provide two (02) sets of hardcopy of Operating Manual of the equipment along with one (01) soft copy (CD).	
11	Calibration: Vendor to provide calibration certificate of the system traceable to National/International standards from an accredited Laboratory.	

(39) Technical Specification for Portable multifunctional Primary CT Injection Kit		
Sl No	**Parameters**	**Specifications**
1	Functional Requirement	Primary Current Injection Kit shall be used to test and commission Circuit Breakers, Bus-Bars, CTs & Relays and ground grids etc.. These are also used for high current injection and simultaneously measuring voltage drops and hot spots in bus bar joints, circuit breaker contacts etc. The unit shall be of modular design to permit optimal user configuration of output current vs.unit size having separate control and current (loading) unit. Current reduction function should allow the current to be pre-set using lowcurrent to prevent test sample heating, thus eliminating corruption of test results.
2	Input Voltage supply	230 Single Phase or 400 V Three Phase, 50 Hz AC.
3	Output Current	1680A continuous @ 6 volts. 3600A for 3 min @ 6 volts 8000A for 1sec @ 6 volts
5	LCD Display	The display should provide Time, output primary current, secondary voltage and current, phase angle, turn ratio & impedance.
6	Automatic injection stop	Generation should stop after a user-specified interval or when condition at the input is met.
7	System Memory	The control unit has a built-in memory used to save or recall settings. One of thesememoriesshould contain the default (pre-defined) settings.
8	Communication Interface	USB port to connect to the PC to download and analyse measurement.
9	Operating Temperature	0 °C to +50°C
10	Storage Temperature	0°C to +55°C
11	Humidity	upto 95%
12	Warranty / Guarantee	18 months form the date of delivery or 12 months form the date of successful & complete commissioning at end user sub-station, whichever is earlier.
		All the materials, including accessories, cables, laptops (wherever supplied) etc. are to be covered under warranty/ guarantee period. If the kit needs to be shifted to supplier's works for repairs within warranty/guaranty period, suppliers will have to bear the cost of repairs, spares and transportation of kit for repair at service center/works.
13	Calibration certificate	Unit shall be duly calibrated at NABL accredited laboratory before supply and the date of calibration shall not be older than two months from the date of supply of the kit.
14	Type Testing	The test kit shall be type tested for Environmental Tests, EMI-EMC & Safety Tests as per relavent IEC Standardwith latest amendment at any accredited laboratory(accredited by NABL or recognised International accredition body). The type test report should be submitted alongwith the offer.

15	Training	Supplier shall have to ensure that the kit is made user friendly. Apart from detailed demonstration at site, the supplier shall also have to arrange necessary training to end-user's engineers.
16	Commissioning, Handing over the Instrument	Successful bidder will have to commission the instrument to the satisfaction of end user.
17	After Sales Service	Bidder will have to submit the documentary evidence of having established mechanism in India for prompt after sales services.

(31) Guaranteed Technical Particular for Portable multifunctional Primary CT Injection Kit

The GTP must be furnished only in the following format and in full.

Sl No	Parameters	Specifications	Bidder's particulars
A	Name and Address of the manufacturer		
B	Type and model of the equipment		
C	Applicable Indian/International Standards for the offered equipment		
1	Functional Requirement	Primary Current Injection Kit shall be used to test and commission Circuit Breakers, Bus-Bars, CTs& Relays and ground grids etc. These are also used to for high current injection and simultaneously measuring voltage drops and hot spots in bus bar joints, circuit breaker contacts etc. The unit shall be of modular design to permit optimal user configuration ofoutput current vs.unit size having separate control and current (loading) unit. Current reduction function should allow the current to be pre-set using lowcurrent to prevent test sample heating, thus eliminating corruption of test results.	
2	Input Voltage supply	230 Single Phase or 400 V Three Phase, 50 Hz AC.	
3	Output Current	1680A continuous @ 6 volts. 3600A for 3 min @ 6 volts 8000A for 1sec @ 6 volts	
4	LCD Display	Time, output primary current, secondary voltage and current, phase angle, turn ratio & impedance	

5	Automatic injection stop	Generation should stop after a user-specified interval or when condition at the input is met.	
6	System Memory	The control unit has a built-in memory used to save or recall settings. One of these memories should contain the default (pre-defined) settings.	
7	Communication Interface	USB port to connect to the PC to download and analyse measurement.	
8	Wight (Kg)		
9	Operating Temperature	0 °C to +50°C	
10	Storage Temperature	-25°C to +55°C	
11	Humidity	upto 90%	
12	After Sales Support	Bidder will have to submit the documentary evidence of having established mechanism in India for prompt after sales services.	
13	Warranty / Guarantee	**18** months form the date of delivery or 12 months form the date of successful & complete commissioning at end user sub-station, whichever is earlier.	
		All the materials, including accessories, cables, laptops (wherever supplied) etc. are to be covered under warranty/ guarantee period. If the kit needs to be shifted to supplier's works for repairs within warranty/guaranty period, suppliers will have to bear the cost of repairs, spares and transportation of kit for repair at service center/works.	
14	Calibration certificate	Unit shall be duly calibrated at NABL accredited laboratory before supply and the date of calibration shall not be older than two months from the date of supply of the kit.	
15	Training	Supplier shall have to ensure that the kit is made user friendly. Apart from detailed demonstration at site, the supplier shall also have to arrange necessary training to end user engineers.	
16	Commissioning, Handing over the Instrument	Successful bidder will have to commission the instrument to the satisfaction of end user.	
17	After Sales Service	Bidder will have to submit the documentary evidence of having	

		established mechanism in India for prompt services.	

Note: The bidder shall furnish **complete & specific information** against Sl. No.(1) to (17).The Bidder may also furnish any other information as in their opinion is needed to give full description and details to judge the item(s) offered by them **in addition to the above given parameters**. (Listing Sl.No.18, 19,…….etc). The GTP must be signed and sealed by the manufacturer/bidder.

Annexure A

Technical specifications of Online moisture removal system / dry out system for Transformers

1. Online Transformer Dry out system shall be suitable for large power transformer, distribution transformers, reactors for removal of moisture from winding insulation of transformers/ reactors in service condition of these equipment.
2. The system should be of portable type, easy to relocate, fitted with 2/3 nos of easy to replace cartridges in cylinder.
3. System shall be suitable for outdoor application and shall be provided with protection or enclosure for continuously working in extreme weather conditions – like high / low ambient temp, heavy rains, storms etc as normally experienced at the site (Mathura Refinery).
4. System should be based on molecular sieves technology for moisture absorption.
5. The absorption capacity of a set of all cartridges/cylinders should be at least 10 liters of water.
6. Two numbers of moisture sensors should be provided for inlet and outlet moisture measurement.
7. The material of construction should be of stainless Steel 304 grade, maintenance and corrosion free type. Cylinders: 304 grade stainless steel all welded construction with quick fit couplers for ease of removal. Frame: 304 grade stainless steel all welded construction. Pump: Canned Rotor circulation pump running at average 50- 250 l/hr - 25ºC to 110ºC Pipe work: Stainless Steel. **FITTINGS:-**,ball valves, flow indicator, de-aerator, etc. Lockable air bleed valve.
8. Suitable adaptor of different sizes(3 minimum) for inlets and outlets with piping of transformer shall be provided.
9. Isolation and sampling valves at inlet and outlet for a quick isolation of system as well as sample collection.
10. The system should be capable of running continuously for unmanned operation.
11. The system should bring the Oil Parameters such as BDV and water content in conformity with IEC 60422.
12. The system should comply with IEEE C57.140.2006
13. The dissolved gases should not be destroyed.
14. The system should have Flow rate not higher than 240 LPH.
15. Nominal working pressure-2bar
16. Working temperature of transformer oil- up to 100°C.
17. Rated ambient operating temperature upto to 50°C.
18. The electric panel shall be provided with PLC/Microprocessor in series with display. the system should have local control panel which should be able to display following parameters-
    - Inlet PPM and Temperature of Oil
    - Outlet PPM and Temp. of Oil.
19. Electronic display will be provided preferably with IEC 61850 and fibre optics port/ RJ45 port/ USB port for connection to PC for downloading data in PC, or the memory card to download data in spreadsheet format. Internal data storage capacity for more

than 1 Years to maintain the history of the moisture level in insulation. Required software shall also be provided for data analysis

20. Automatic pump control is required based on setting of moisture level. Moisture level settings shall be adjustable at site from 5 to 10 ppm.
21. System should have a built-in feature of moderation of moisture absorption in order to prevent the excessive drying of insulation and which makes the insulation brittle and causes breakdown. The Equipment shall be capable of maintaining transformer factory dry out moisture level for new transformer or below 1.0-1.5% for old transformer or equal to less than 8 PPM moisture content levels at 60Deg
22. Onboard watchdog for tracking moisture in thinner insulation structure by a 24X7 tracking and should prevent the system from over-drying the insulation
23. All the drawings and operation maintenance manuals shall be supplied with the system.
24. The commissioning at site shall be done. User training shall be provided at site

25. Warrantee

a. All apparatus/ items shall be warranted against manufacturing defects for 12 months from the date of acceptance at site or from date of commissioning/ demonstration at site(if applicable), whichever is later.
b. In case of any defective parts / components, same shall be replaced with brand new components. The defective components shall be replaced within 15 days of intimation and vendor has to arrange for collection of defective components and replacement of components, at their own cost within the warrantee period.

26. Delivery Period

The material shall be dispatched and received at site within 2 months of placement of purchase order.

27. Miscellenous

a. Bidder shall submit the apparatus details in attached data sheet for evaluation of the offer. Relevant brochure shall also be attached with the technical bid.
b. Evaluation of technical part shall be done only on the basis of confirmation of technical specifications by the bidder. No reference to catalogue / manual etc shall be made for evaluation. It shall be binding on the bidder to supply material as per technical specifications only. Deviations, if any, shall be submitted separately in the deviation statement only, subject to acceptance.
c. Organizational chart and hierarchal reporting structure (at least for division / business unit level) shall be submitted after placement of purchase order for escalation of complaints. Names, designations, Phone nos (mobile and

landline) , email ids and addresses of all the concerned shall be submitted and shall be updated and intimated time to time to Engineer In Charge.

d. The Vendor shall give the details of after sale/service facilities available in India and approximate time for repair jobs. Contact details and list of authorized centres shall also be provided after purchase order.

28. Data Sheet-

Following data sheet shall be filled and submitted by the bidder along with bid

Make of system	
Number of Cartridges/ Cylinders for moisture absorption	
Moisture absorption capacity of each cartridge	

(41) TRANSFORMER TESTING VAN SPECIFICATIONS:

The system should be completely equipped to perform specified tasks as listed in specification.

1) The system should have capability to work in highest induction zone upto 765KV switch yards.
2) The system should have single operating console which should communicate with all individual modules/equipment and display the results on single screen in same software of solid insulations.
3) In system the entire operation control should carried out for solid insulation testing via a central operating PC, that controls and switches the individual equipment, surveys the measurement results and produces the test reports. There should be single software for complete testing with different mode which can be controlled through software with the help of switchbox. Switchbox will control below different modes.
    a. LV Mode – All test related to LV testing like three phase turns ratio and Winding resistance will be conducted through LV Cables (H and X) with one time connections.
    b. HV Mode – All test related to HV testing like Insulation resistance 10KV, Tan Delta 12KV and Frequency domain spectroscopy will be conducted through HV cables (HV 12KV, Red, Blue and interlock) with one time connections.
    c. SFRA Mode – SFRA testing should be done through (Generator and measurement cables).
4) Control unit should have below features
    a. Main Switch and Circuit Breaker
    b. Line Voltage Indicator
    c. Error indicators (Left and right rear door open, earthing connection, Emergency switch activated, Cable Unwound mode, Voltage between the vehicle chassis and surrounding ground (auxiliary earth) is higher than 40 V)
    d. Operating mode activation indicator (LV, HV, SFRA).
5) The System should have clear compartments for personal/operator and equipment with separate consoled for connection, power supply, cables and a suitable sitting arrangement for operator.
6) The System should be fully air-conditioned and equipped with proper earth matting and red/green signal system for checking the proper earthing of system.
7) External safety device should be provided so that status of the system can be indicated outside and the HV processing can be interrupted or blocked using the EMERGENCY OFF switch and key switch.
8) Proper grounding should be there for safety. The earth cable establishes the connection between the system and the protective earth and ensures that the entire system is touch-proof.
9) Auxiliary grounding should also be provided by placing the earth spike into the ground in the immediate vicinity of the system and attach the auxiliary earthing cable to it so that control module can indicate when Voltage between the vehicle chassis and surrounding ground (auxiliary earth) is higher than 40 V.
10) All equipment should be from single OEM.

11) Furniture - Ergonomic work place with adequate desktop, functional floor cupboard, and revolving chair with locking facility.
12) Vehicle - It shall be possible to use any vehicle with a suitable payload and space like Force Traveller or as suitable.
13) Quality - The instruments and systems shall be produced to meet the ISO 9001:2000 standard. The system must be CE certified.